Operating and Service Manual

EBS SYSTEM

MODEL 760

TFT

TIME AND FREQUENCY
TECHNOLOGY, INC.

Warranty

TIME & FREQUENCY TECHNOLOGY, INC., warrants each of the instruments of its manufacture to be produced to meet the specifications delivered to the BUYER: and to be free from defects in material and workmanship and will repair or replace, at its expense, for a period of one year from the date of delivery of equipment, any parts which are defective from faulty material or poor workmanship.

Instruments found to be defective during the warranty period shall be returned to the factory with transportation charges prepaid by BUYER. It is expressly agreed that replacement and repair shall be the sole remedy of BUYER with respect to any nonconforming equipment and parts thereof and shall be in lieu of any other remedy available by applicable law. All returns to the factory must be authorized by TFT, prior to such returns. Upon examination by the factory, if the instrument is found to be defective, the unit will be repaired and returned to the BUYER, with transportation charges prepaid by TFT.

Transportation charges for instruments found to be defective within the first thirty (30) days of the warranty period will be paid both ways by the TFT.

Transportation charges for warranty returns, wherin failure is found *not* to be the fault of the SELLER, shall be paid both ways by the *BUYER*.

This Warranty does not apply to instruments which, in the opinion of the SELLER, have been altered or misused.

NO OTHER WARRANTY IS EXPRESSED OR IMPLIED. TFT IS NOT LIABLE FOR CONSEQUENTIAL DAMAGES.

Claim for Damage in Shipment.

Your instrument should be inspected and tested as soon as it is received. The instrument is insured for safe delivery. If the instrument is damaged in any way or fails to operate properly, file a claim with the carrier, or if insured separately, with the insurance company.

WE SINCERELY PLEDGE OUR IMMEDIATE AND FULLEST COOPERATION TO ALL USERS OF OUR PRECISION ELECTRONIC INSTRUMENTS.

PLEASE ADVISE US IF WE CAN ASSIST YOU IN ANY MANNER.

TFT

TIME AND FREQUENCY TECHNOLOGY, INC.

3000 Olcott St.
Santa Clara, CA 95051
408-246-6365

Table of Contents

		Page
Section 1	**General Information**	
	1.1 General Description	1-1
	1.2 Specificaitons	1-1
	1.2.1 Model 760-01 AM Receiver	1-1
	1.2.2 Model 760-02 FM Receiver	1-1
	1.2.3 Model 760-03 Tone Decoder	1-2
	1.2.4 Model 760-04 Two-Tone Generator	1-2
	1.2.5 Model 760-05 Dual Purpose Decoder	1-2
Section 2	**Installation**	
	2.1 Unpacking and Inspection	2-1
	2.2 Power Requirement	2-1
	2.3 Installation and Hookup	2-1
	2.3.1 Receiver AM or FM	2-1
	2.3.1d External Carrier Fail Alarm	2-1
	2.3.2 Two-Tone Generator	2-1
	2.3.2b Combined AM/FM/TV Operation	2-1
	2.3.3 Tone Decoder	2-1
	2.3.4 Dual-Purpose Decoder	2-3
	2.4 Antenna Installation	2-4
Section 3	**Operation**	
	3.1 General	3-1
	3.2 AM Receiver	3-1
	3.3 FM Receiver	3-1
	3.4 Two-Tone Generator	3-1
	3.4.1 Basic Operation	3-1
	3.4.2 Remote Control	3-1
	3.4.3 External Audio Switching	3-1
	3.5 Tone Decoder	3-1
	3.6 Dual Purpose Decoder	3-2
Section 4	**Theory of Operation**	
	4.1 System	4-1
	4.2 AM Receiver	4-1
	4.3 FM Receiver	4-1
	4.4 Two-Tone Generator	4-1
	4.5 Tone Decoder	4-2
	4.6 Dual Purpose Decoder	4-2
Section 5	**Maintenance**	
	5.1 General	5-1
	5.2 Periodic Maintenance	5-1
	5.3 Performance Checks	5-1
	5.3.1 AM Receiver	5-1
	5.3.2 FM Receiver	5-1
	5.3.3 Tone Decoder	5-1
	5.3.4 Two Tone Generator	5-1
	5.3.5 Dual Purpose Decoder	5-2
Section 6	**Schematic Diagrams**	
	6.1 Block Diagram	
	6.2 AM Receiver	
	***6.3 FM Receiver**	
	6.4 Two-Tone Generator	
	6.5 Tone Decoder	
	***6.6 Dual Purpose Decoder**	

*These Diagrams are only included when applicable.

Section 1
General Information

1.1 General Description.

The TFT EBS System is designed to meet the FCC Two-Tone EBS interstation signaling requirements. It normally consists of three modules—the model 760-04 Two-Tone Generator, the Model 760-01 AM Receiver or the Model 760-02 FM Receiver, and the Model 760-03 Tone Decoder—mounted in a cabinet for installation in a 19-inch relay rack.

An emergency two-tone signal received from the AM or FM station being monitored will be heard on the EBS System speaker after such a tone has been received for at least 8 seconds. The EBS System provides the means for interrupting normal programming and broadcasting the two-tone emergency signal for 23.4 seconds, and for inserting emergency announcements. Normal operation can be restored by operation of two reset switches.

1.2 Specifications.

EBS Cabinet Assembly

Module Capacity	will accept up to three EBS modules (Models 760-01, -02, -03, -04, and -05). Blank panels are provided when fewer than three modules are in use.
Input Power*	117 VAC ± 15%, 50/60 Hz, 20 watts maximum.
Operating Temperature*	0 ° to 50 °C.
Operating Humidity*	95% Relative.
Size	3.5" (8.9 cm) high x 19" (48.3 cm) wide x 12" (30.5 cm) deep.
Weight	Approx. 10 pounds (4.5 kg)

1.2.1 Model 760-01, Frequency-Synthesized AM Receiver

Frequency Range	540-1620 kHz
Local Oscillator Stability	±500 Hz per year
Tuning Method	Channel frequency digitally set in 10 kHz steps by thumbwheel switches.
Antenna Input	75 ohms nominal, unbalanced.
Sensitivity	30 μV for 20 dB S/N at 30% modulation.
Image Rejection	50 dB
AGC	70 dB
IF Bandwidth, 6dB	±5 kHz
Harmonic Distortion	Less than 3% at 90% modulation.
Noise	45 dB or greater below 100% modulation with 10 MV RF
Audio Outputs, 600 ohms	Balanced: +8 dBm. Unbalanced: 1 V rms
Carrier-Off Output	Active pullup to 10 V, 10 ma

1.2.2 Model 760-02, Crystal Controlled FM Receiver

Frequency Range	88-108 MHz
Channel Frequency	Specify frequency, either one or two channel versions available.
Antenna Input	75 ohms nominal, unbalanced.
Sensitivity	2 μV for 30 dB of quieting.
IF Bandwidth, 6dB	±150 kHz
Image Rejection	40 dB
AGC	80 dB
Audio Frequency Response	±1 dB, 50 Hz - 15 kHz
Harmonic Distortion	1%
S/N Ratio	60 dB or greater below 100% modulation at 50 μV RF input

*Specifications apply to all system modules.

De-emphasis	75 μ sec
Audio Outputs, 600 ohms	Balanced: +8 dBm. Unbalanced: 1 V rms
Carrier-Off Output	Active pullup to 10V, 10ma.

1.2.3 Model 760-03, Two-Tone Decoder

Input Level Required	100 mV into 600 ohms
Tone Frequencies**	853 Hz and 960 Hz
Bandwidth**	±5 Hz
Listen Operate Switch	In Operate mode the loudspeaker is muted until an EBS alert is decoded. In Listen mode, the loudspeaker is demuted.
Audio Output	1 Watt, internal loudspeaker
Reset Switch	Resets decoder and mutes loudspeaker
Remote Operation	The RESET switch wiring is brought out to the rear panel.
Time Delay for De-muting**	12 seconds ±4 seconds
External Alarm Contracts	SPDT relay contacts brought out to rear panel.

1.2.4 Model 760-04, Two-Tone Generator

Output Frequencies**	853 Hz and 960 Hz
Frequency Accuracy**	±0.25 Hz, crystal controlled
Output Level	+8 dBm nominal (per tone)
Output Impedance	600 ohms, balanced
Harmonic Distortion**	Less than 2%
Tone Duration**	23.4 seconds, ±0.15 seconds
Tone Level Adjust**	Front panel pot, −2 dBm to +8 dBm
Program Audio Routing	Rear panel DPDT relay contacts. Balanced input and output. Switchover and latch to EBS programming is automatic.
Emergency Program Audio Input	Unbalanced input. Internally inserted into program line.
Test Switch	Connects Generator to Decoder for testing without interrupting program audio.
Tone Switch	Enables one tone at a time for setting level and checking distortion.
Command Switches	2 toggle switches. Must be activated in opposite directions to turn on Generator.
Reset Switch	Releases latch to restore normal program audio.
Remote Operation	The COMMAND and RESET switch wiring is brought to the rear panel.

1.2.5 Model 760-05, Dual-Purpose Decoder

See Model 760-03, Two-Tone Decoder for Two-Tone Specifications

Carrier Break/1000 Hz Specifications:

Input Level Required	100 mV into 600 ohms
Tone Frequency	1000 Hz
Bandwidth	±50 Hz
Time to demute after start of Carrier Break sequence	23 to 27 sec.
RESET switch	Resets decoder and mutes loudspeaker.
Listen/Operate Switch	In Operate mode the loudspeaker is muted until an EBS alert is decoded. In Listen mode the loudspeaker is demuted.
Audio Output	1 Watt, internal loudspeaker
Remote Operation	The RESET switch is brought out to the rear panel.
External Alarm Contacts	SPDT relay contacts brought out to rear panel.

Specifications are typical except those identified by ** which are guaranteed.

Section 2
Installation

2.1 Unpacking and Inspection.

Upon receiving the instrument, inspect the packing box and instrument for signs of possible shipping damage. Operate the instrument in accordance with the procedures of Section 3 of this manual. If the instrument is damaged or fails to operate properly, file a claim with the transportation company, or with the insurance company if insured separately.

2.2 Power Requirements.

The Model 760 EBS System operates from a 117-volt Ac Source. The line frequency must be between 50 and 60 hertz. Maximum power required is 20 watts.

2.3 Installation and Hookup.

When the EBS System Cabinet assembly is mounted in a 19-inch relay rack with all modules in place, make the following connections to the module terminal strips at the rear of the cabinet. After all connections have been made, plug the power cord into a 117-volt, 60-hertz source. There is no power switch in the system: it is energized whenever its power cord is plugged in.

2.3.1 Receiver AM or FM.

a. If an AM or FM Receiver is installed, connect a 75 ohm coax cable from the antenna to the rear-panel ANTENNA connector.

b. Connect the rear-panel UNBAL AUDIO terminal to the DECODER AUDIO INPUT terminal.

c. If desired, the rear-panel BALANCED AUDIO terminals can be connected to a monitor or other device. Output at these terminals is +8dBm at 600 ohms for 100% modulation.

d. If a remote indication of carrier failure is to be provided, connect the rear-panel CARRIER FAIL terminal to the remote indicator. Output from this terminal is+ 10 volts @ 10 ma for normal carrier level, and 0 volts with 5 ma current sinking for carrier failure. For operating an external carrier fail alarm relay, see Figure 2-1 for suggested circuit. Total external relay current must not exceed 250 ma.

2.3.2 Two-Tone Generator.

a. If the monaural program audio is to be looped through the Two-Tone Generator, connect the program input line to the rear-panel AUDIO IN terminals and connect the program output line to the rear-panel AUDIO OUT terminals.

b. If the program line is not to be looped

TFT MODEL 760

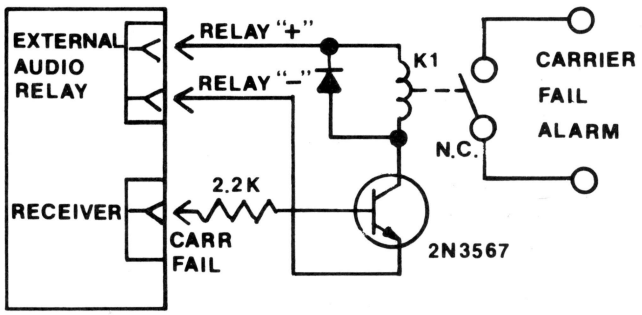

K1: POTTER & BRUMFIELD R10-E1-Y2-V185. TOTAL RELAY CURRENT MUST NOT EXCEED 250 mA.

Figure 2-1

through the Two-Tone Generator, or if combined AM/FM/TV program audio is to be controlled, external circuitry like that diagrammed in Figure 2-2 is recommended. Relays K1, K2, and K3 shown in Figure 2-2 should have 12-volts coils, and the total coil current must not exceed 250 milliamperes. Relay power and EBS audio input come from connector J2 on the rear panel of the Two-Tone Generator.

c. Connect a wire from the rear-panel TEST OUT terminal to the DECODER TEST INPUT terminal. This provides a means to test the Two-Tone Generator and Tone Decoder together without interrupting the program.

d. Connect the emergency announcement audio line (unbalanced) to the rear-panel AN INPUT terminal.

e. If remote control of the command and reset functions is desired, connect the rear-panel COMMAND and RESET terminals to remote switches. Grounding these lines activates the functions.

NOTE: Pursuant to Section 73.940 (j) of the FCC Rules & Regulations, the remotely located command switch must be guarded such as to prevent accidental operation.

2.3.3 Tone decoder.

a. Connect the rear-panel AUDIO INPUT terminal to the RECEIVER UNBAL AUDIO as previously stated in Subsection 2.3.1b or to another EBS monitor receiver if used. The sentitivity of the Tone Decoder is factory adjusted so that a 100 per cent modulated signal (+8 dBm at the *DECODER AUDIO INPUT* terminal) will produce 10 volts peak-to-peak at the rear-panel LEVEL terminal when used with

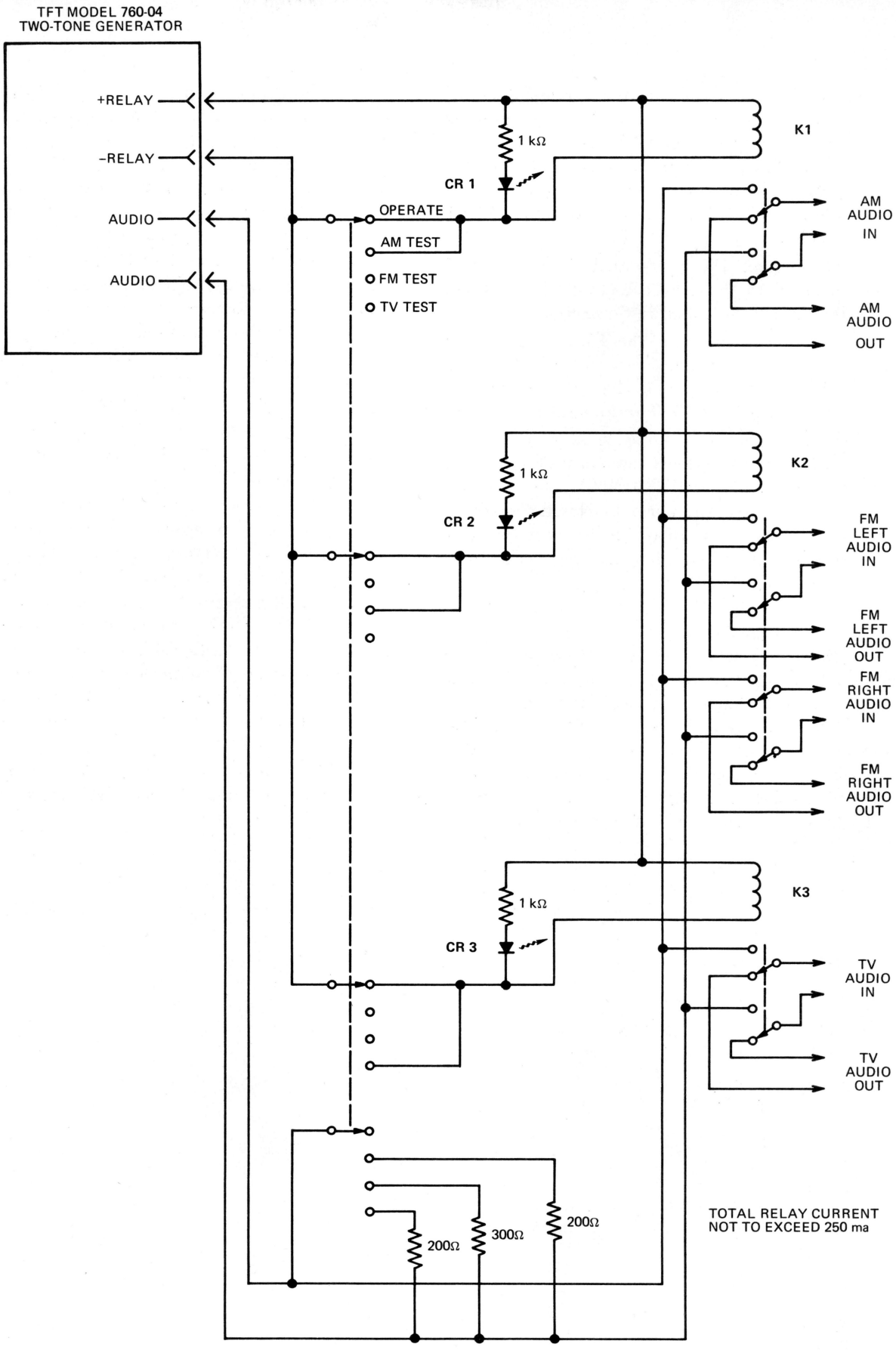

K1, K3: POTTER & BRUMFIELD R10-E1-Y2-V185

K2: POTTER & BRUMFIELD R10-E1-Y4-V185

CR1, CR2, CR3: HPA 5082-4487

Figure 2-2

a TFT Model 760-01 or Model 760-02 Receiver. If a different receiver is used, the audio input should not be less than 250 mV rms for a 100% modulated signal (100mV rms for 40% modulation), and internal potentiometer R6 can be adjusted for 10 volts peak-to-peak at the LEVEL terminal.

b. Connect the rear-panel TEST INPUT terminal to the GENERATOR TEST OUT terminal as described in Subsection 2.3.2c.

c. If remote control of the Tone Decoder reset function is desired, connect the rear panel RESET terminal to the remote switch. Grounding the RESET terminal effects a reset.

d. If a received two-tone signal is to actuate a station alarm, connect the alarm device to the rear-panel DECODER RELAY terminals. The normally open and normally closed contacts of the internal alarm relay together with the relay common, are internally connected to these terminals.

2.3.4 Dual Purpose Decoder.

The Model 760-05 EBS Dual-Purpose Decoder operates on both the EBS signal to be used after April 16, 1976, and the EBS signal used before that date.

After the new EBS goes into effect, it is important to disable the circuit which was used to detect the old EBS signal by removing Resistor R46 from the module. The board on which this Resistor is mounted is marked "CUT" in two places to facilitate the removal.

a. Connect the rear-panel AUDIO INPUT terminal to the RECEIVER UNBAL AUDIO or to another EBS monitor receiver if used. The sensitivity of the Tone Decoder is factory adjusted so that a 100-percent modulated signal (+8 dBm at the Decoder AUDIO INPUT terminal) will produce 10 volts peak-to-peak at the rear-panel DECODER LEVEL terminal when used with a TFT Model 760-01 or Model 760-02 Receiver. If a different receiver is used, the audio input should not exceed 5V rms, and internal potentiometer R5 can be adjusted for 10 volts peak-to-peak at the LEVEL terminal (signal should be adjusted just into limiting).

b. Connect the rear-panel TEST INPUT terminal to the GENERATOR TEST OUT terminal.

c. If remote control of the Tone Decoder reset function is desired, connect the rear-panel RESET terminal to the remote switch. Grounding the RESET terminal effects a reset.

d. If a received two-tone signal is to actuate a station alarm, connect the alarm device to the rear-panel DECODER RELAY terminals. The normally open and normally closed contacts of the internal alarm relay, together with the relay common, are internally connected to these terminals.

e. Connect the rear-panel CARRIER FAIL terminal to the CARRIER FAIL terminal of the Receiver.

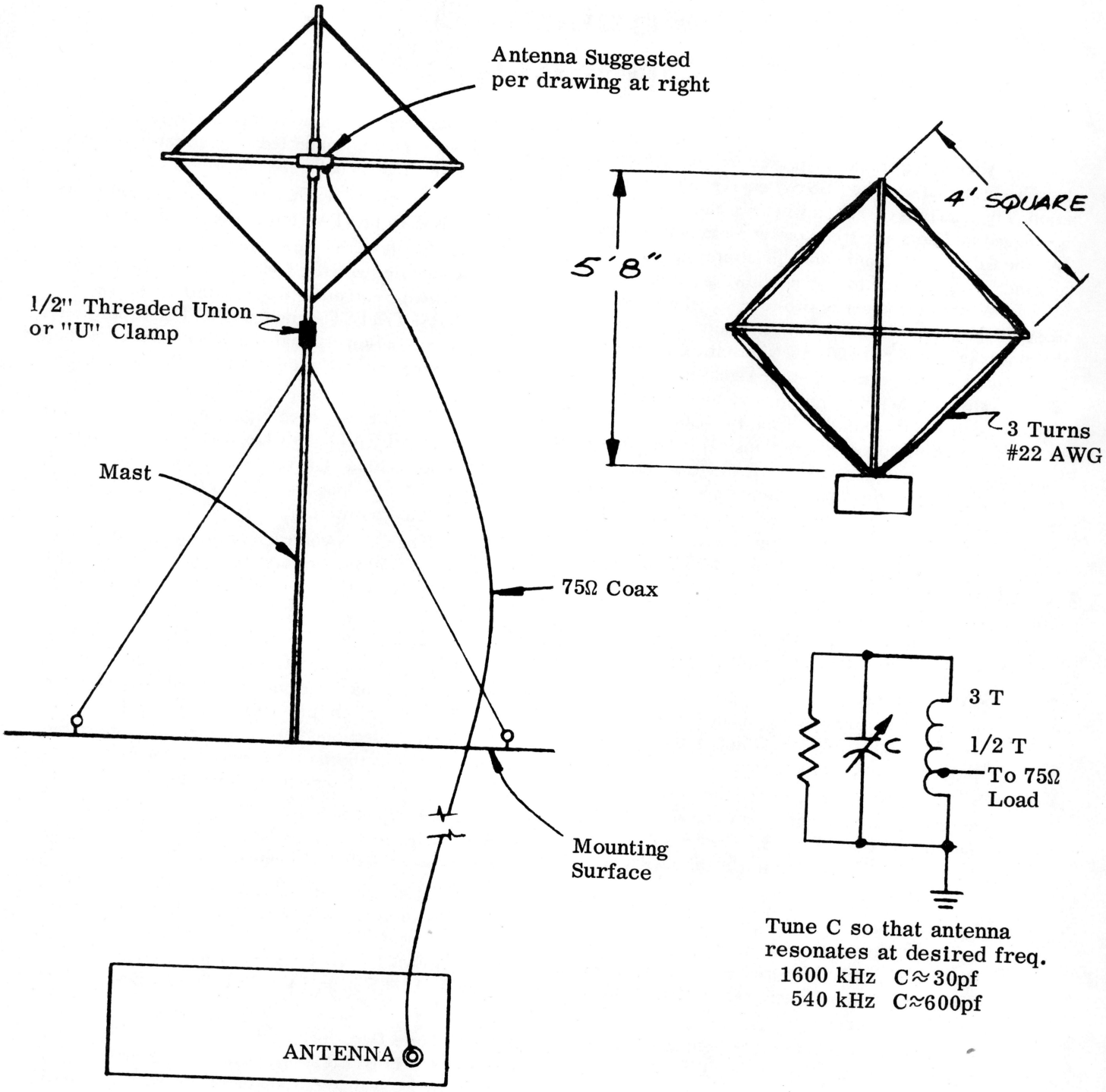

Model 760 Rear Panel

2.4 Antenna Installation

If a local FM antenna is not available, any conventional FM or TV antenna is satisfactory. If a local AM antenna is not available, an end-fed long wire antenna (approximately 250 ft.) can be used with good results. One end of the long wire should be connected at the rear-panel ANTENNA connector

For moderately strong signal areas, the above illustration is an alternative to the long-wire antenna.

Section 3
Operation

3.1 General.

After the installation procedures of Section 2 have been carried out, the EBS System is ready for operation. The system is energized whenever the power cord is plugged into an appropriate power receptacle. Figure 3-1, the EBS System front panel, illustrates the controls and indicators referred to in the following paragraphs.

When an emergency two-tone signal is received from the station to which the receiver is tuned, and when the tone is present for at least 8 seconds, the speaker will be demuted, allowing the two-tone signal to be heard. The operator can then transmit the two-tone emergency signal by moving the handles of the two COMMAND toggle switches in opposite directions. This will interrupt normal programming, transmit the tones for 23.4 seconds, and allow emergency announcements to be transmitted. At any time after operating the COMMAND switches, the operator can resume normal programming by moving the RESET/TEST switch to RESET. He can also mute the speaker by operating the Tone Decoder RESET switch.

Detailed operating instructions for each module are presented in Subsections 3.2 through 3.6.

3.2 AM Receiver.

a. Dial in the desired frequency on the thumbwheel switches. These switches indicate the frequency in tens of kilohertz.

b. Tune the preselector for the best signal as determined by maximum speaker volume with the Tone Decoder LISTEN/OPERATE switch in the LISTEN position, and by the CARR lamp being lighted.

3.3 FM Receiver.

a. Press the channel selector switch for the desired channel, if ordered with two channels. The single channel receiver is fixed tuned to the specified channel.

b. The CARR lamp must be lighted, indicating sufficiently strong signal for satisfactory operation.

3.4 Two Tone Generator.

3.4.1 Basic Operation.

a. Check that the POWER lamp is lighted, indicating that the Two-Tone Generator is receiving DC power from the Tone Decoder.

b. To transmit an emergency signal, operate the two COMMAND switches in opposite directions as indicated by the arrows on the front panel. The COMMAND lamp should light, indicating that the dual-tone audio signal is being delivered to the transmitter for a period of 23.4 seconds. At the end of the tone period, emergency announcements can be made on the audio circuit connected to the rear-panel AN. INPUT terminal.

c. To restore normal programming, move the RESET/TEST switch to the RESET position.

d. To test the operation of the Two-Tone Generator with the Tone Decoder without interrupting normal programming, move the RESET/TEST switch to the TEST position. The Dual-tone signal should be present at the speaker for 23.4 seconds, with the Decoder in the listen mode.

e. To test the tones separately, move the 853 Hz/OPERATE/960 Hz switch to the desired tone position. The tone should be heard on the speaker as long as the switch is held in the selected posiiton.

f. The GAIN control allows adjustment of the Two-Tone Generators' two-tone audio output to interface with the stations audio system.

3.4.2 Remote Control.

Both the COMMAND and RESET functions can be remotely controlled if the connections described in Subsection 2.3.3e have been made. Operating the remote COMMAND switch performs the same functions described in Subsection 3.4.1a, and operating the remote RESET switch is the same as operating the front-panel RESET switch as described in Subsection 3.4.1b.

NOTE: Pursuant to Section 73.940 (j) of the FCC Rules & Regulations, the remotely located command switch must be guarded such as to prevent accidental operation.

3.4.3 External Audio Switching.

If audio switching is to be accomplished externally be means of circuitry like that of Figure 2-2, move the AM/FM/TV/OPERATE switch to either AM TEST, FM TEST, or TV TEST to test these circuits individually.

3.5 Tone Decoder.

The POWER lamp should be on, indicating that DC power is available from the Tone Decoder power supply.

When the LISTEN/OPERATE switch is set to OPERATE, the speaker circuit will be muted until a dual 853 Hz/960 Hz tone is received for 8 seconds, at which time the sepaker circuit will be enabled and the alarm relay will energize. This condition will exist until the RESET switch is operated, at which time the speaker circuit will again be muted and the alarm will de-energize.

When the LISTEN/OPERATE switch is set to LISTEN the speaker is demuted and incoming audio is continuously monitored.

3.6 Dual Purpose Decoder

The POWER lamp should be on, indicating that DC power is available from the Tone Decoder power supply.

When the LISTEN/OPERATE switch is set to OPERATE, the speaker circuit will be muted until an EBS signal is received. This will enable the speaker circuit and the alarm relay will energize. This condition will exist until the RESET switch is operated, at which time the speaker circuit will again be muted and the alarm relay will be deenergized.

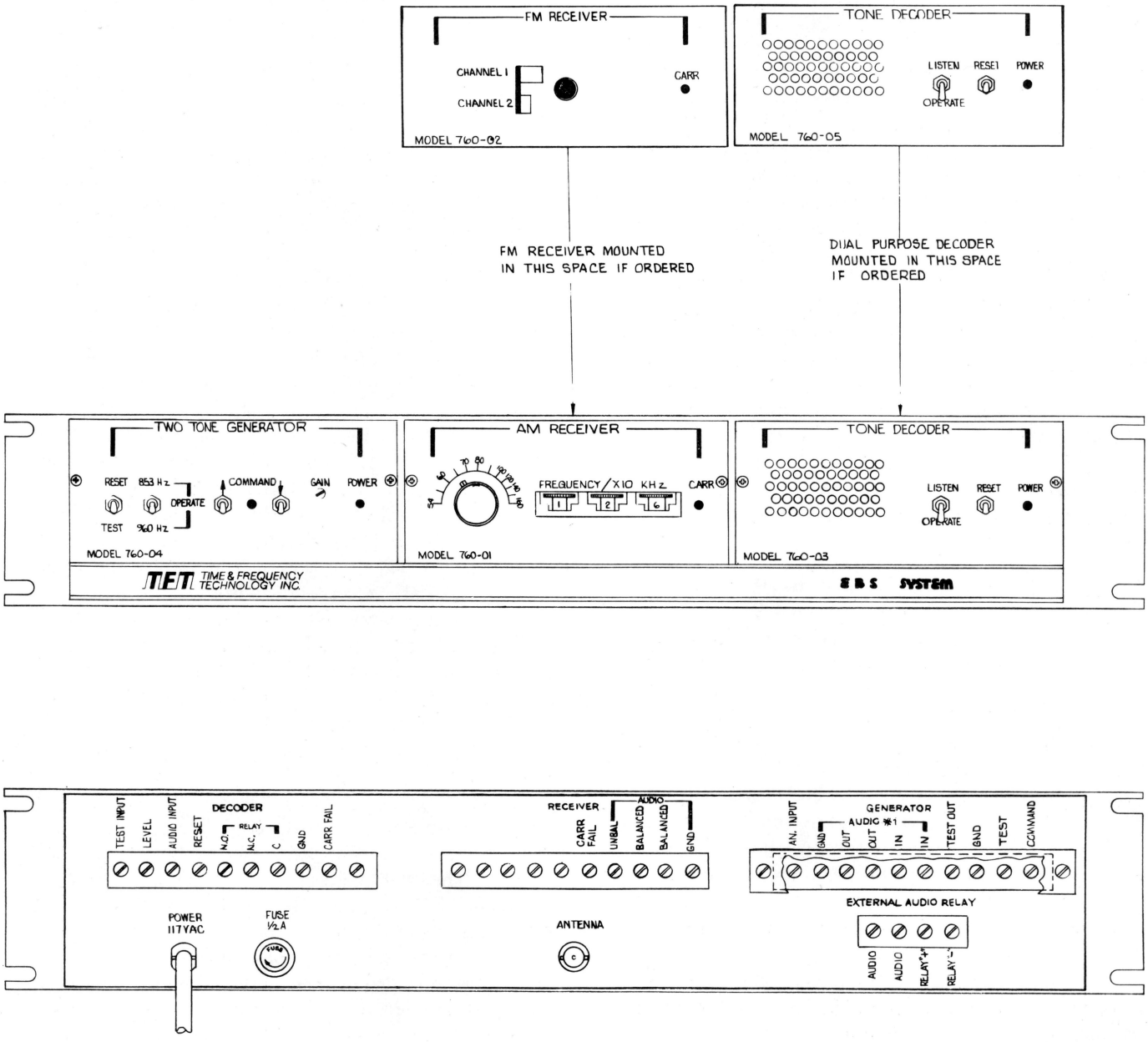

Figure 3-1

Section 4
Theory of Operation

4.1 System.

(Block Diagram: Figure 6-1)

The received signal is demodulated in the AM or FM Receiver, and the resulting audio is applied to the Tone Decoder. If an EBS emergency signal is present (853 Hz and 960 Hz tones present simultaneously for at least 8 seconds), the Tone Decoder demutes its speaker so that the audio can be heard, and energizes a relay to actuate an external alarm. The station's program audio is normally fed through closed relay contacts in the Two-Tone Generator. However, when the COMMAND switches are closed, the program is interrupted, the EBS two-tone signal is placed on the program line to the transmitter for 23.4 seconds, and a local announcement line is activated so that emergency announcements can be made.

The Tone Decoder external alarm circuit and speaker muting can be reset by a front-panel switch or by grounding a remote reset line. The Two Tone Generator can be reset for normal programming by a front panel switch or by grounding a remote reset line. Provisions are made for testing the Two Tone Generator with the Tone Decoder without interrupting the programming, and for separately checking the generation of the two emergency tones, as described in the following paragraphs. Both the AM and FM Receiver furnish an output for a remote carrier-fail alarm.

4.2 AM Receiver Model 760-01.

(Schematic Diagram: Figure 6-2)

This module is a superheterodyne receiver covering the AM broadcast band from 540-1620 kHz in 10 kHz steps. RF amplifier Q1 is tuned by a front-panel control to peak the received signal. Its output is mixed by Q2 with a local-oscillator input from a frequency synthesizer (described in the next paragraph.) The 450-kHz IF signal is amplified by Q4 and Q5, and detected by CR3. The resulting audio signal is amplified by Z16 and fed to the UNBALANCED audio output terminal: it is also fed through transformer T1 to the BALANCED audio output terminals. The output from detector CR3 is also amplified by Q3 and applied as an AGC voltage to RF amplifier Q1 and mixer Q2.

The LO input to the mixer comes from dual retriggerable monostable multivibrator Z11 functioning as a voltage controlled oscillator. The phase-locked loop consists of oscillator Z11, a divide-by-N divider (Z5 through Z10), and a phase detector (Z12). A precision 10 kHz reference signal for the phase detector is obtained from 5 MHz crystal oscillator Q10 by dividing by 500 in Z15, Z14, and Z13. The logic ones and zeroes from the front-panel thumbwheel switches (S1) are decoded by the logic circuitry of gates Z1 through Z4 to cause the divide-by-N divider to divide the output frequency of oscillator Z11 by the appropriate number to produce a 10-kHz input to pin 1 of phase detector Z12 when the oscillator output is exactly 450 kHz above the frequency indicated by the thumbwheel switches. Any phase difference between the output of the divide-by-N-circuit and this 10-kHz reference is detected in Z12, which produces a voltage to retune the oscillator by means of Q11.

The IF signal at the output of mixer Q2 is detected in Q7/Q8, and used to turn on the CARR LED CR7 to indicate the reception of a carrier. The output of detector Q7/Q8 is also amplified by Q6 and fed to rear-panel connector J3-5 to operate a carrier-fail alarm; this output is +10 volts at 10 ma whan a carrier is present, and 0 volts (2000 ohm return to ground) for carrier failure.

4.3 FM Receiver Model 760-02.

(Schematic Diagram: Figure 6-3)

The FM Receiver is capable of receiving any two preselected frequencies within the FM broadcast band of 88 to 108 MHz. The RF amplifier and mixer are each one-half of a MOSFET dual-gate transistor pair. In the RF amplifier the RF input is applied to one gate and AGC to the other. In the Mixer, the RF input is applied to one gate, and the LO signal to the other. The LO is a crystal oscillator (Q2) whose output is tuned to twice the crystal frequency. One crystal is standard, the second optional crystal is selectable by a front-panel switch. This switch also connects an additional tuning capacitor in the crystal oscillator and RF amplifier circuits when the switch is in the position that selects the lower of the two channel frequencies. The LO output frequency is 10.7 MHz above the desired RF signal.

The 10.7 MHz mixer output is fed through two ceramic filters (FL1 and FL2) to provide high selectivity, and into integrated circuit Z2, which functions as an IF amplifier, squelch circuit, detector, AGC, and AFC. The IF amplifier is factory-tuned to 10.7 MHz by L9 and C32.

The AGC voltage at pin 15 of Z2 controls the gain of the RF amplifier. The squelch voltage at pin 12 of Z2 is amplified by Z3 and used to light CARR LED CR1 when received carrier develops sufficient squelch voltage. The squelch is also further amplified by Q3 to drive an external carrier alarm circuit through rear-panel terminal 5; this output is +10 volts at 10 ma when a carrier is present and 0 volts (2000 ohm return to ground.) for carrier failure.

4.4 Tone Decoder Model 760-03.

(Schematic Diagram: Figure 6-5)

This module detects the presence of the 853 Hz and 960 Hz tones in the receiver audio output. If both tones are present sumultaneously for at least 8 seconds,

the Tone Decoder demutes its speaker circuit so that the receiver audio can be heard; it also energizes a relay whose contacts can be connected to an external alarm circuit. Provision is made for testing system operation by using the test signals from the Two Tone Generator.

The audio input from the AM or FM receiver is applied to the piezoelectric filters, FL1 and FL2, through a section of buffer amplifier Z1. The filter outputs are amplified in different sections of Z1 and drive detector diodes CR1 and CR2. Z1 input stage, pins 11, 12, and 10, is configured to limit significant overdrives in input level. When either 853 Hz or 960 Hz are present, voltages build up across capacitor C9 or C11 driving the collector of Q1 or Q2 low. If one of the two tones is present only one of collectors Q1 or Q2 will be low and transistor Q3 will be on, holding the voltage at TP3 close to ground. LEDs CR3 and CR4 turn off as collectors Q1 and Q2 go low, respectively. These LEDs are inside the module and may be used for maintenance test purposes.

If both tones are present, collectors Q1 and Q2 are low and Q3 is off, allowing C13 to charge through R26. At the end of 8 seconds, the voltage across C13, amplified by Q4/Q5, is high enough to fire SCR Q7, thus energizing relay K1, and turning on speaker amplifier Z2 to demute the speaker audio, which is normally muted as described below. To reset the relay and speaker, RESET switch S2 is operated to either position, or RESET terminal J2-4 is grounded. This turns off Q6 and therefore Q7.

The unbalanced audio input from the Receiver is also applied to the speaker amplifier Z2 through volume control R5 with switch S1 in the OPERATE position, pin 2 of Z2 is pulled up to a positive voltage causing speaker amplifier Z2 to mute. Placing S1 in the LISTEN position removes this positive voltage at pin 2 of Z2 and thus demutes the speaker amplifier.

The audio output of buffer Z1 is also fed to LEVEL terminal J2-2. GAIN control R4 is factory set so that at 100-percent modulation, the voltage at the LEVEL terminal is 10 volts peak-to-peak, when used with the 760-01 or 760-02 Receivers.

The power supply for the entire EBS System is contained in the Tone Decoder module, with the exception of the 12-volt transformer which is mounted on the cabinet. Power connections to the receiver and the Two Tone Generator are made through J1 and J3.

4.5 Two Tone Generator Model 760-04.

(Schematic Diagram: Figure 6-4)

This module generates the two tone, 23.4 second tone pulse required by the system. It also contains the circuitry for switching the transmitter modulation from normal programming to emergency tones and announcements. Provision is made for testing the 853 Hz and 960 Hz tones separately, and for testing the operation of the Generator with the Tone Decoder without interrupting normal programming.

The 853 Hz tone is generated by dividing the 3.2552 MHz output of crystal oscillator Q2 by 3840 in the divider chain consisting of Z16, Z15, Z14, and Z13. When pin 9 of Z2 is held at logic 1 by the control circuitry, the 853 Hz tone is gated through an active 1-KHz low-pass filter (Z18), level control R23, and GAIN control R24 to audio power amplifier Z17.

The crystal oscillator output is also divided by 2 in Z16 and then by 1706 in the divider chain consisting of Z9, Z10, Z11, and Z8 to produce the 960 Hz tone. When pin 9 of Z8 is held at logic 1 by the control circuitry, the 960 Hz tone is delivered through low-pass filter Z19, level control R20, and GAIN control R24 to amplifier Z17. Transformer T1 provides a 600 ohm balanced output which is delivered to AUDIO OUT terminals J3-7 and J3-8 when relay K1 is energized.

Pin 10 of flip-flop Z3 is normally at logic 1. This resets decade counters Z6, Z7, Z5, and Z4 to 0, and holds them at this count. When COMMAND toggle switches S3 and S4 are activated simultaneously in opposite directions, or when switch S1 is placed in the TEST position, a logic 0 is applied to pin 7 or Z3. This drives pin 10 of Z3 to logic 0, enabling the four decade counters, which proceed to divide the 853 Hz tone from pin 8 of Z13 by 100,000. The frequency is further divided by 2 in Z3 to produce the required 23.4 second time pulse at pin 15 of Z3. Flip-flop Z3 is so connected that the pin 10 output returns to logic 1 at the end of the 23.4 second pulse and remains there until the next operation of the COMMAND or TEST switch. The 23.4 second negative-going pulse at pin 10 of Z3 turns on gate Z2-3 by means of Z2-6 to enable the 853 Hz tone, and also the 960 Hz tone through gate Z2-3 and flip-flop Z-8.

When the Command switches are activated (or REMOTE COMMAND terminal J3-1 is grounded), latch Z1-11/Z1-8 is set to turn on Q1 and thus light COMMAND LED CR2 and energizes relay K1. When K1 is de-energized, its contacts feed the normal program audio to AUDIO OUT terminals J3-7 and J3-8. When the relay is energized, the tones (or the announcement input form J3-10) supply the audio output. Once energized, the relay will remain in that condition until a logic 0 is applied to the reset input of the latch from switch S1 or from remote RESET terminal J3-2. Note that placing S1 in the TEST position does not energize relay K1.

Placing S2 in the 853 Hz position gates the 853 Hz tone through to TEST OUTPUT J3-4, so that this tone can be tested independently. Similarly, the 960 Hz tone can be delivered to the TEST OUTPUT terminal by placing S2 in the 960 Hz position.

Power for the Two Tone Generator is normally supplied from the Tone Decoder through connector J1. When the Generator is used without the Decoder, the power supply shown in Fugure 6-4 is used, with AC power input supplied from the cabinet-mounted 12 volt transformer through connector J4.

4.6 Dual Purpose Decoder Model 760-5

(Schematic diagram Figure 6-6)

These instructions apply to the EBS operating

before April 16, 1976. For the EBS operating after that date, refer to Section 4.4.

This Module detects the presence of a Carrier Break/1kHz emergency signal from the transmitter being monitored. When such a signal is detected, the Tone Decoder demutes its speaker circuit so that the receiver audio can be heard; it also energizes a relay whose contacts can be connected to an external alarm circuit.

The Dual-Purpose Decoder detects the emergency signal consisting of the following sequence:

Transmitter carrier off 5 seconds.
Transmitter carrier on 5 seconds.
Transmitter carrier off 5 seconds.
Transmitter carrier on with 1-KHz tone modulation.

The audio input from the AM or FM Receiver is applied to tone decoder Z2 through buffer amplifier Z1-5. The decoder output at pin 8 of Z2 is logic 0 when a 1 kHz tone is present, and logic 1 when it is not. R41 and C19 provide a time delay of approximately 10 seconds, so that the 1 kHz signal must be present for at least that length of time before an alarm is indicated. After amplification by Q9, Q10, Q11, the received tone will produce a logic 1 at pin 2 of Z3.

When a carrier is being received, the Receiver will deliver +10 volts to the Decoder CARRIER FAIL terminal 9. When the carrier goes off, the voltage at terminal 9 drops to approximately 0 volts, which causes integrator Z4-5 to develop a positive-going ramp voltage, producing an abrupt drop from +5 volts to 0 volts in the output of comparator Z4-4 when the threshold voltage is reached. When the carrier comes back on, Z4-5 develops a negative-going ramp voltage, causing the output of Z4-4 to return again to 5 volts. Thus, the emergency signal will produce two positive-going pulses at the clock input (pin 6) of Z5. The Q outputs of the two Z5 flip-flops are normally at logic 0, but the two pulses of the emergency signal cause the Q output of the second flip-flop (pin 15) to go to logic 1. The two logic 1's at the input of Z3-3 thus deliver a logic 1 to the gate of SCR Q6 when an EBS signal is received.

Gate Z3-8, integrator Z4-10, and comparator Z4-9 constitute an error detector which resets the Z5 flip-flops to 0 when carrier interruptions are received that do not meet the specifications of an EBS emergency signal. Operation of the front-panel or remote RESET switch will also reset the flip-flops to 0.

When SCR Q6 is fired by the EBS signal, it energizes relay K1 and turns off CR8 to demute the speaker audio, which is normally muted as described below. To reset the realy and speaker, RESET switch S2 is operated to either position, or RESET terminal J2-4 is grounded. This turns off Q7 and therefore Q6.

The unbalanced audio input from the Receiver is also applied to the speaker amplifier (Z4) through volume control R8 and muting circuit CR8. With switch S1 in the OPERATE position, CR8 is normally on and furnishes an offset bias to pin 2 of Z6, thus muting it. The speaker audio can be demuted by placing S1 in the LISTEN position.

The audio output of buffer Z1 is also fed to LEVEL terminal J2-2. Gain control R5 is factory set so that at 100-percent modulation, the voltage at the LEVEL terminal is 10 volts peak-to-peak.

The power supply for the entire EBS System is contained in the Tone Decoder module, with the exception of the 12-volt transformer which is mounted on the cabinet. Power connections to the Receiver and the Two-Tone Generator are made through J1 and J3.

Section 5
Maintenance

5.1 General.

Since the Model 760 is a solid-state instrument and its power requirements are low, no maintenance problems due to high temperature should be encountered, provided the instrument is installed well away from vacuum-tube and other heat-generating equipment. Likewise, because the operating voltages are low, excessive dust accumulation associates with high-voltage devices should not occur.

5.2 Periodic Maintenance.

The only periodic maintenance required is cleaning. Once a year, or more often in dusty locations, take off the top cover and blow off the dust with compressed air.

5.3 Performance Checks.

The following procedures will enable the technician to determine whether the instrument is operating properly. If the tests indicate substandard operation, it is recommended that the instrument be returned to the factory for adjustment or repair. Internal adjustments are not recommended to be made in the field.

5.3.1 AM Receiver, Model 760-01

a. Sensitivity

1. Connect a Signal Generator (HP8640B or equivalent) to the ANTENNA input on the rear panel with its frequency at 540kHz and AM modulation set to 50%, 1kHz. Set output level at 10μV.

2. Connect a general purpose oscilloscope to the UNBAL and GND terminals on the rear panel.

3. Dial in 540kHz on thumb wheel switches of 760-01 and tune the preselector for maximum signal on the oscilloscope.

4. Slowly increase the level of the Signal Generator until the CARR LED comes on — this should occur at approximately 30μV. At the time the CARR LED comes on the voltage at the CARR FAIL terminal on the rear panel should change from 0 volts to 10V DC.

b. AGC Range

1. Increase the Signal Generator level to 30mV and the 1kHz sinewave on the oscilloscope should remain undistorted.

2. Repeat steps for 1030kHz and 1600kHz input signal.

5.3.2 FM Receiver, Model 760-02

a. Sensitivity

1. Connect a Signal Generator (HP8640B or equivalent) to the ANTENNA input on the rear panel with its frequency at the receiver's channel frequency and its frequency deviation set for 75kHz at a 1kHz rate. Set output level at 1μV.

2. Connect a general purpose oscilloscope to the UNBAL and GND terminals on the rear panel.

3. Slowly increase the level of the Signal Generator until the CARR LED comes on — this should occur at approximately 2μV. At the time the CARR LED comes on the voltage at CARR FAIL terminal on the rear panel should change from 0 volts to 10V DC.

b. AGC Range

1. Increase the Signal Generator level to 20mV and the 1kHz sinewave on the oscilloscope should remain undistorted.

2. If receiver is a dual-channel version, repeat procedure for alternate channel.

5.3.3 Tone Decoder, Model 760-03

a. Connect a jumper wire between rear panel terminals TEST INPUT on the Decoder and TEST OUT on the Generator. If a receiver is available connect its UNBAL output to the AUDIO INPUT terminal and tune the receiver to a local channel. With the LISTEN / OPERATE switch on the Decoder in the LISTEN position audio should be heard on the speaker. Switch to the OPERATE position and the audio should no longer be audible.

b. Activate the COMMAND switch on the Generator and check that LED's CR3 and CR4 go out, indicating that the two tones are being received. 8 to 12 seconds after the initiation of the COMMAND switch, the speaker should demute and the two tones should be audible for another 12 to 16 seconds. When demuting the speaker the Decoder RELAY contacts should switch. The speaker will remain in the demuted mode and the relay will stay switched until reset by the Decoder RESET switch.

5.3.4 Two-Tone Generator, Model 760-04

a. Connect a voltmeter and a counter at the TEST OUT terminal at the rear panel of the Two-Tone Generator.

b. Activate the 853Hz tone by placing the 853Hz/OPERATE /960Hz switch in the 853Hz position. The voltage (unloaded) should be approximately 4V r.m.s. (This voltage may be adjusted with the front panel GAIN control).

The frequency should be 853Hz ± 0.5 Hz. Repeat the procedure for the 960 Hz tone.

c. Activate the TEST switch and two tones should be present for 23.4 seconds.

d. Activate the COMMAND switch and the two tones should be present for 23.4 seconds and the AUDIO #1 relay should switch and stay switched until RESET is activated on the front panel.

5.3.5 Dual Purpose Decoder, Model 760-05

a. Connect a jumper wire between rear panel terminals TEST INPUT on the Decoder and TEST OUT on the Generator. Connect a jumper wire between the AUDIO UNBAL and AUDIO INPUT terminals of the Receiver and Decoder, respectfully. Tune the Receiver to a local channel so the CARR LED on its Receiver front panel is on.

b. With LISTEN/OPERATE switch in the OPERATE position perform the following Carrier-Break simulation. Disconnect the ANTENNA for 5 seconds, reconnect for 5 seconds, disconnect for 5 seconds and simultaneously reconnect the ANTENNA and activate the 960Hz switch on the Generator. After 8 to 12 seconds, the audio should demute.

c. Refer to 5.3.3 for check out of the Two-Tone operational mode of the Decoder.

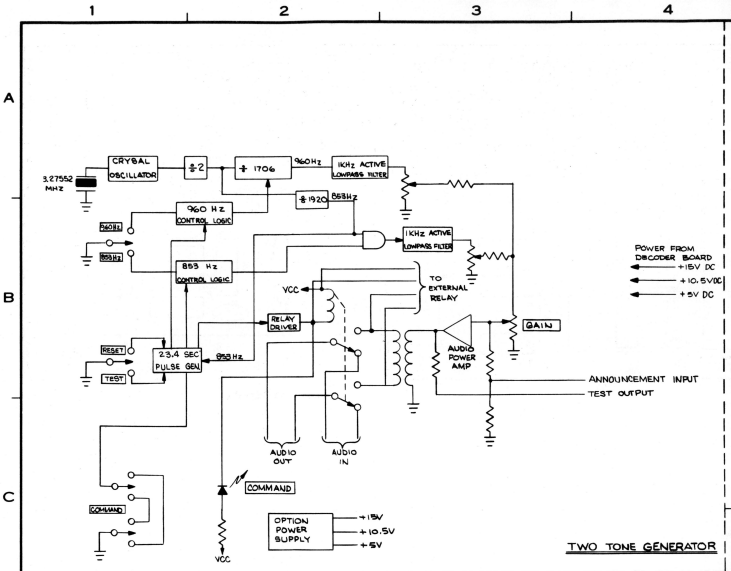

TWO TONE GENERATOR

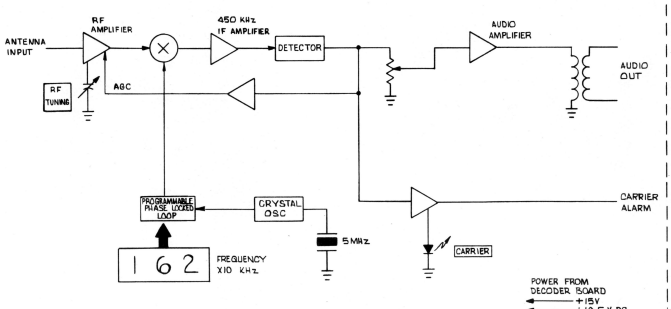

AM RECEIVER

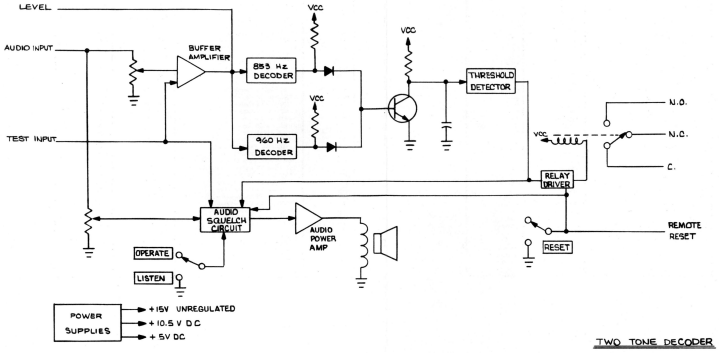

TWO TONE DECODER

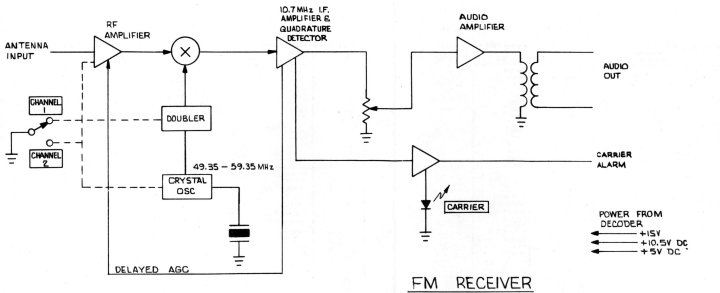

FM RECEIVER

NEXT ASSY	USED ON
	760

REVISIONS

SYM	DESCRIPTION	DR	CHK	AUTH	DATE

ITEM NO.	QTY PER ASSY	PART NO.	DESCRIPTION	REF DES

LIST OF MATERIALS

REMOVE ALL BURRS AND SHARP EDGES

DRAWN BY R.G. 6-11-76

CHK. BY

PROJ. ENG.

MFG. ENG.

APPD.

APPD.

ECO NO.

TOLERANCES UNLESS OTHERWISE SPECIFIED
xx ± ANGULAR
xxx ± ±

DO NOT SCALE THIS PRINT

TFT TIME & FREQUENCY TECHNOLOGY INC.
3000 Olcott St. Santa Clara, California 95050
(408) 246-8300

TITLE SYSTEM BLOCK DIAGRAM FIGURE 6-1

SIZE D | DRAWING NO D6600-0820 | REV A

SCALE — | SHT 1 OF 1

DWG NO D6600-0820

AM Receiver **Model 780-01**

Ckt. Ref.	Description	TFT Stock No.	Mfg.
	P.C. Board/ AM Receiver	1600-0950	TFT
	Capacitors		
C1	.2 μf Disc Ceramic 25 V	1005-2029	Erie
C2	.2 μf Disc Ceramic 25 V	1005-2029	Erie
C3	.2 μf Disc Ceramic 25 V	1005-2029	Erie
C4	.2 μf Disc Ceramic 25 V	1005-2029	Erie
C5	.2 μf Disc Ceramic 25 V	1005-2029	Erie
C6	.2 μf Disc Ceramic 25 V	1005-2029	Erie
C7	.2 μf Disc Ceramic 25 V	1005-2029	Erie
C8	.2 μf Disc Ceramic 25 V	1005-2029	Erie
C9	.2 μf Disc Ceramic 25 V	1005-2029	Erie
C10	.2 μf Disc Ceramic 25 V	1005-2029	Erie
C11	.2 μf Disc Ceramic 25 V	1005-2029	Erie
C12	.2 μf Disc Ceramic 25 V	1005-2029	Erie
C13	.2 μf Disc Ceramic 25 V	1005-2029	Erie
C14	.2 μf Disc Ceramic 25 V	1005-2029	Erie
C15	.2 μf Disc Ceramic 25 V	1005-2029	Erie
C16	.2 μf Disc Ceramic 25 V	1005-2029	Erie
C17	.2 μf Disc Ceramic 25 V	1005-2029	Erie
C18	.05 μf Disc Ceramic 25 V	1005-5039	Erie
C19	.05 μf Disc Ceramic 25 V	1005-5039	Erie
C20	.05 μf Disc Ceramic 25 V	1005-5039	Erie
C21	.001 μf Disc Ceramic 500 V	1005-1049	Sprague
C22	.001 μf Disc Ceramic 500 V	1005-1049	Sprague
C23	.001 μf Disc Ceramic 500 V	1005-1049	Sprague
C24	12 μf Disc Ceramic 500 V	1005-0120	Sprague
C25	10 μf 16 V DC −20 +80% Electrolytic	1010-0011	Mouser
C26	100 μf 25 V DC −20 +80% Electrolytic	1010-0012	Elite
C27	220 μf 16 V DC −20 +80% Electrolytic	1010-0221	Elite
C28	220 μf 16 V DC −20 +80% Electrolytic	1010-0221	Elite
C29	220 μf 16 V DC −20 +80% Electrolytic	1010-0221	Elite
C30	220 μf 16 V DC −20 +80% Electrolytic	1010-0221	Elite
C31	220 μf 16 V DC −20 +80% Electrolytic	1010-0221	Elite
C32	5 μf Disc Ceramic ±5%	1005-0050	Sprague
C33	180 pf Disc Ceramic ±5%	1005-0181	Sprague
C34	22 μf Disc Ceramic ±5%	1005-0220	Sprague
C35	18 μf Disc Ceramic ±5%	1005-0180	Sprague
C36	120 pf Disc Ceramic ±5%	1005-0121	Sprague
C37	33 pf Disc Ceramic ±5%	1005-0330	Sprague
C38	33 μf Disc Ceramic ±5%	1005-0330	Sprague
C39	240 pf Dura-Mica ±5%	1001-0241	Elcap
C40	500 pf Disc Ceramic ±5%	1005-0501	Sprague
C41	39 pf Disc Ceramic ±5%	1005-0390	Sprague
C42	10 μf 16 V Dipped Tant. ±20%	1008-0010	Sprague
C43	Tuning C40	1012-0001	Toko
C44	220 μf 16 V −20 +80% Electrolytic	1010-0221	Stigma
C45	10 μf 16 V −20 +80% Electrolytic	1010-0011	Stigma
	Diodes		
CR1	IN 3064	1281-3064	Motorola
CR2	IN 281	1280-0281	Motorola
CR3	IN 281	1280-0281	Motorola
CR4	IN 3064	1281-3064	Motorola

AM Receiver (Continued) **Model 780-01**

Ckt. Ref.	Description	TFT Stock No.	Mfg.
R25	27 KΩ ½w 5% Carbon Comp.	1065-2702	A.B.
R26	27 KΩ ½w 5% Carbon Comp.	1065-2702	A.B.
R27	470 KΩ ½w 5% Carbon Comp.	1065-4703	A.B.
R28	270 KΩ ½w 5% Carbon Comp.	1065-2703	A.B.
R29	33 KΩ ½w 5% Carbon Comp.	1065-3302	A.B.
R30	10 KΩ ½w 5% Carbon Comp.	1065-1002	A.B.
R31	10 KΩ ½w 5% Carbon Comp.	1065-1002	A.B.
R32	10 KΩ ½w 5% Carbon Comp.	1065-1002	A.B.
R33	10 KΩ ½w 5% Carbon Comp.	1065-1002	A.B.
R34	150Ω ½w 5% Carbon Comp.	1065-0150	A.B.
R35	1 KΩ ½w 5% Carbon Comp.	1065-1001	A.B.
R36	2.2 KΩ ½w 5% Carbon Comp.	1065-2201	A.B.
R37	2.2 KΩ ½w 5% Carbon Comp.	1065-2201	A.B.
R38	2.2 KΩ ½w 5% Carbon Comp.	1065-2201	A.B.
R39	2.2 KΩ ½w 5% Carbon Comp.	1065-2201	A.B.
R40	6.8 KΩ ½w 5% Carbon Comp.	1065-6801	A.B.
R41	6.8 KΩ ½w 5% Carbon Comp.	1065-6801	A.B.
R42	1.2 KΩ ½w 5% Carbon Comp.	1065-1201	A.B.
R43	4.7 KΩ ½w 5% Carbon Comp.	1065-4701	A.B.
R44	4.7 KΩ ½w 5% Carbon Comp.	1065-4701	A.B.
R45	4.7 KΩ ½w 5% Carbon Comp.	1065-4701	A.B.
R46	4.7 KΩ ½w 5% Carbon Comp.	1065-4701	A.B.
R47	4.7 KΩ ½w 5% Carbon Comp.	1065-4701	A.B.
R48	4.7 KΩ ½w 5% Carbon Comp.	1065-4701	A.B.
R49	4.7 KΩ ½w 5% Carbon Comp.	1065-4701	A.B.
R50	4.7 KΩ ½w 5% Carbon Comp.	1065-4701	A.B.
R51	4.7 KΩ ½w 5% Carbon Comp.	1065-4701	A.B.
R52	4.7 KΩ ½w 5% Carbon Comp.	1065-4701	A.B.
R-53	4.7 KΩ ½w 5% Carbon Comp.	1065-4701	A.B.
R54	4.7 KΩ ½w 5% Carbon Comp.	1065-4701	A.B.
R55	100 KΩ ½w 5% Carbon Comp.	1065-1003	A.B.
R56	100 KΩ ½w 5% Carbon Comp.	1065-1003	A.B.
R57	270 KΩ ½w 5% Carbon Comp.	1065-2703	A.B.
R58	68 KΩ ½w 5% Carbon Comp.	1065-6802	A.B.
R59	1.1 MEG ½w 5% Carbon Comp.	1065-1104	A.B.
R60	620 Ω ½w 5% Carbon Comp.	1065-0620	A.B.
R61	180 Ω ½w 5% Carbon Comp.	1065-0180	A.B.
R62	3.3 KΩ ½w 5% Carbon Comp.	1065-3301	A.B.
R63	3.3 KΩ ½w 5% Carbon Comp.	1065-3301	A.B.
R64	3.3 KΩ ½w 5% Carbon Comp.	1065-3301	A.B.
R65	1.5 KΩ ½w 5% Carbon Comp.	1065-1501	A.B.
R66	1.5 KΩ ½w 5% Carbon Comp.	1065-1501	A.B.
R67	1.5 KΩ ½w 5% Carbon Comp.	1065-1501	A.B.
R68	1.8 KΩ ½w 5% Carbon Comp.	1065-1801	A.B.
R69	2.7 KΩ ½w 5% Carbon Comp.	1065-2701	A.B.
R70	180 Ω ½w 5% Carbon Comp.	1065-0180	A.B.
	Switch		
S1	3 Station Thumbwheel Switch	1875-0004	Ecco
	Transformer		
T1	Audio Transformer	1500-0014	Grand

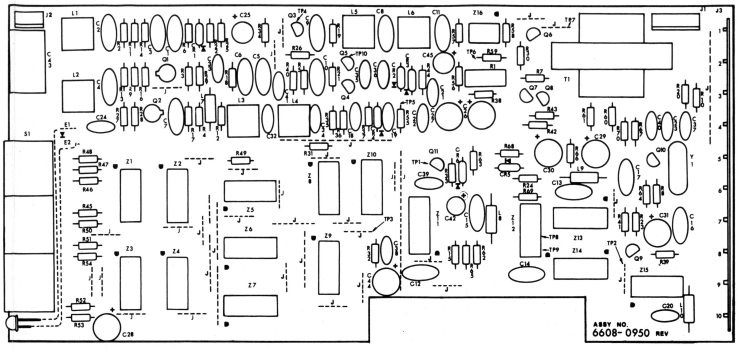

AM RECEIVER

AM Receiver (Continued) **Model 780-01**

Ckt. Ref.	Description	TFT Stock No.	Mfg.
CR5	IN 3064	1281-3064	Motorola
CR6	IN 3064	1281-3064	Motorola
CR7	LED (1385-4487)	1285-4487	H. P.
	Inductors		
L1	700 μH AM RF Autotransformer	1500-0700	Bosco
L2	700 μH AM RF Autotransformer	1500-0700	Bosco
L3	450 KHz IF Transformer	1500-0450	Bosco
L4	450 KHz IF Transformer	1500-0450	Bosco
L5	450 KHz IF Transformer	1500-0450	Bosco
L6	450 KHz IF Transformer	1500-0450	Bosco
L7	680 μH RF Choke	1530-0681	Delevan
L8	47 μH RF Choke	1530-0470	Delevan
L9	2 ½ T Choke	1530-0025	Ferrocube
L10	2 ½ T Choke	1530-0025	Ferrocube
	Transistors		
Q1	FET 40841	1271-4084	RCA
Q2	FET 40841	1271-4084	RCA
Q3	2N3565	1271-3565	Fairchild
Q4	2N3565	1271-3565	Fairchild
Q5	2N3565	1271-3565	Fairchild
Q6	2N4121	1271-4121	Fairchild
Q7	2N3565	1271-3565	Fairchild
Q8	2N3565	1271-3565	Fairchild
Q9	2N4275	1271-4275	Fairchild
Q10	2N3563	1271-3563	Fairchild
Q11	2N4121	1271-4121	Fairchild
	Resistors		
R1	10 KΩ ±10% Single Turn Pot.	1069-0103	Piher
R2	15 KΩ ½w 5% Carbon Comp.	1065-1502	A.B.
R3	5.6 KΩ ½w 5% Carbon Comp.	1065-5601	A.B.
R4	5.6 KΩ ½w 5% Carbon Comp.	1065-5601	A.B.
R5	5.6 KΩ ½w 5% Carbon Comp.	1065-5601	A.B.
R6	3.9 KΩ ½w 5% Carbon Comp.	1065-3901	A.B.
R7	390 Ω ½w 5% Carbon Comp.	1065-0390	A.B.
R8	390 Ω ½w 5% Carbon Comp.	1065-0390	A.B.
R9	390 KΩ ½w 5% Carbon Comp.	1065-3903	A.B.
R10	1 KΩ ½w 5% Carbon Comp.	1065-1001	A.B.
R11	180 KΩ ½w 5% Carbon Comp.	1065-1803	A.B.
R12	330 Ω ½w 5% Carbon Comp.	1065-0330	A.B.
R13	330 Ω ½w 5% Carbon Comp.	1065-0330	A.B.
R14	330 Ω ½w 5% Carbon Comp.	1065-0330	A.B.
R15	330 Ω ½w 5% Carbon Comp.	1065-0330	A.B.
R16	470 Ω ½w 5% Carbon Comp.	1065-0470	A.B.
R17	470 Ω ½w 5% Carbon Comp.	1065-0470	A.B.
R18	1 KΩ ½w 5% Carbon Comp.	1065-1001	A.B.
R19	1 KΩ ½w 5% Carbon Comp.	1065-1001	A.B.
R20	1 KΩ ½w 5% Carbon Comp.	1065-1001	A.B.
R21	1 KΩ ½w 5% Carbon Comp.	1065-1001	A.B.
R22	1 KΩ ½w 5% Carbon Comp.	1065-1001	A.B.
R23	1 KΩ ½w 5% Carbon Comp.	1065-1001	A.B.
R24	1 KΩ ½w 5% Carbon Comp.	1065-1001	A.B.

AM Receiver (Continued) **Model 780-01**

Ckt. Ref.	Description	TFT Stock No.	Mfg.
	Crystal		
Y1	5 MHz Crystal	2400-0502	Monitor
	Integrated Circuits		
Z1	SN 7410	1100-7410	T.I.
Z2	SN 7410	1100-7410	T.I.
Z3	SN 7400	1100-7400	T.I.
Z4	SN 7400	1100-7400	T.I.
Z5	SN 74176	1100-8280	T.I.
Z6	SN 74176	1100-8280	T.I.
Z7	SN 74176	1100-8280	T.I.
Z8	SN 7420	1100-7420	T.I.
Z9	SN 7425	1100-7425	T.I.
Z10	SN 7472	1100-7472	T.I.
Z11	SN 74123	1100-7414	T.I.
Z12	MC 4044	1100-4044	Motorola
Z13	SN 7490	1100-7490	T.I.
Z14	SN 7490	1100-7490	T.I.
Z15	SN 7490	1100-7490	T.I.
Z16	LM 741	1100-0741	T.I.
	Connector, 2 pin	2250-0020	Molex
	Connector, 4 pin	2250-0004	Molex
	Barrier Strip (10 Position) P.C. MT.	1700-0010	Kulka

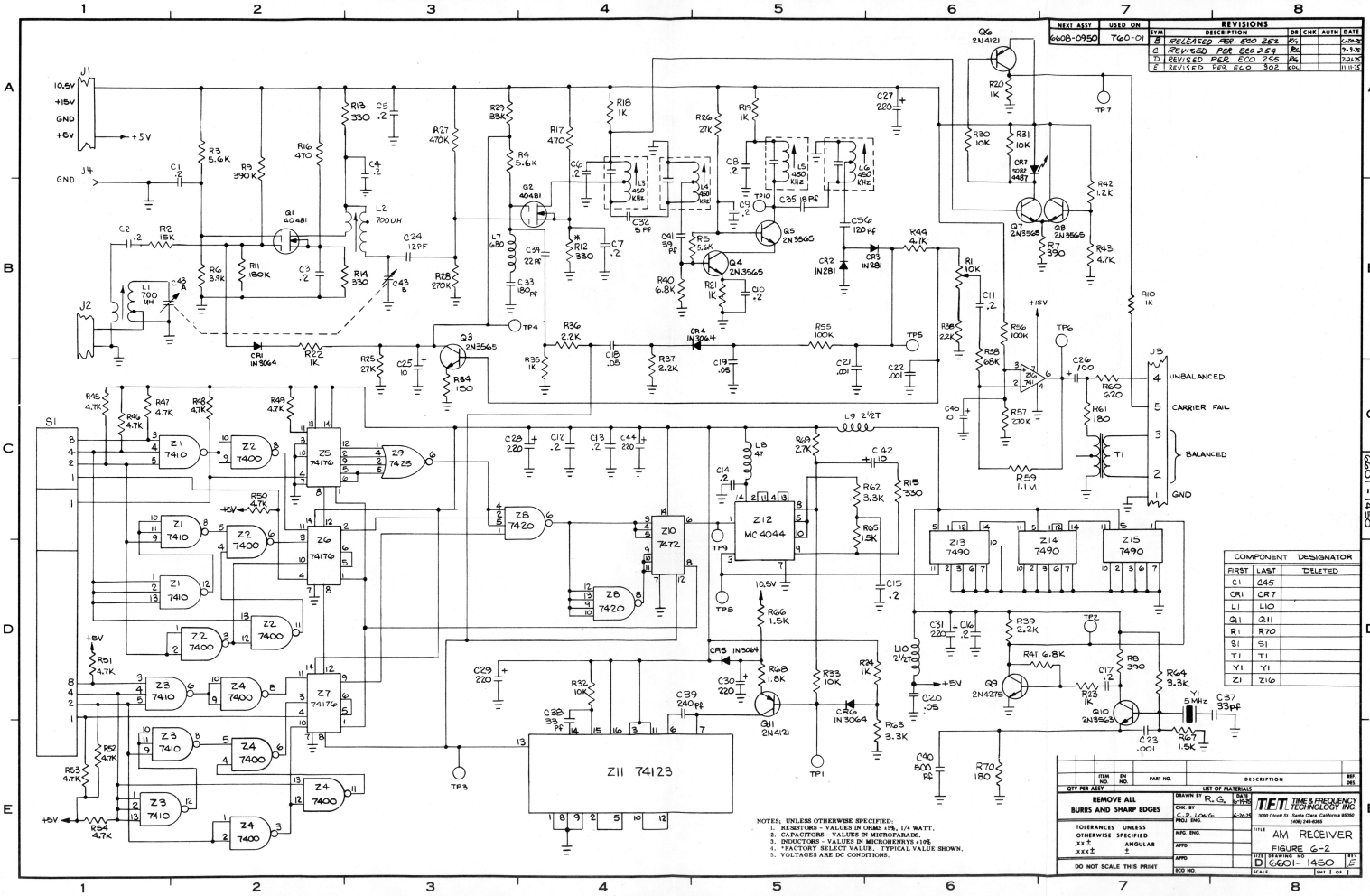

NEXT ASSY	USED ON
6608-0950	T60-01

REVISIONS

SYM	DESCRIPTION	DR	CHK	AUTH	DATE
B	RELEASED PER ECO 252	RG			6-20-75
C	REVISED PER ECO 254	RG			7-9-75
D	REVISED PER ECO 255	RG			7-21-75
E	REVISED PER ECO 302	CDL			11-11-75

COMPONENT DESIGNATOR		
FIRST	LAST	DELETED
C1	C45	
CR1	CR7	
L1	L10	
Q1	Q11	
R1	R70	
S1	S1	
T1	T1	
Y1	Y1	
Z1	Z16	

NOTES; UNLESS OTHERWISE SPECIFIED:
1. RESISTORS - VALUES IN OHMS ±5%, 1/4 WATT.
2. CAPACITORS - VALUES IN MICROFARADS.
3. INDUCTORS - VALUES IN MICROHENRYS ±10%
4. *FACTORY SELECT VALUE. TYPICAL VALUE SHOWN.
5. VOLTAGES ARE DC CONDITIONS.

QTY PER ASSY	ITEM NO.	EN NO.	PART NO.	DESCRIPTION	REF DES

LIST OF MATERIALS

REMOVE ALL BURRS AND SHARP EDGES

TOLERANCES UNLESS OTHERWISE SPECIFIED
.xx ± ANGULAR
.xxx ± ±

DO NOT SCALE THIS PRINT

DRAWN BY R.G. DATE 6-19-75
CHK. BY C.P. LONG 6-20-75
PROJ. ENG.
MFG. ENG.
APPD.
APPD.
ECO NO.

TFT TIME & FREQUENCY TECHNOLOGY INC.
3000 Olcott St., Santa Clara, California 95050
(408) 249-6065

TITLE AM RECEIVER
FIGURE 6-2

SIZE D DRAWING NO 6601-1450 REV E
SCALE SHT 1 OF 1

DWG. NO. 6601-1450

Single Channel FM Receiver — **Model 780-08**

Ckt. Ref.	Description	TFT Stock No.	Mfg.
	P.C. Board FM Receiver	1600-0960	TFT
	Capacitors		
	Dual Channel Recv. Only		
C1	33 pf ±5% Duramica (Factory Select)	1001-0330	El Cap
C2	100 pf ±5% Dura-Mica	1001-0101	El Cap
C4	.01 µf 25 V +80 −20% Disc Ceramic	1005-1039	Erie
C5	.01 µf 25 V +80 −20% Disc Ceramic	1005-1039	Erie
C6	.01 µf 25 V +80 −20% Disc Ceramic	1005-1039	Erie
C7	Dual Channel Recv. Only		
C8	.01 µf 25 V +80 −20% Disc Ceramic	1005-1039	Erie
C9	100 µf 16 V Electrolytic	1010-0012	Sfigma
C10	.01 µf 25 V +80 −20% Disc Ceramic	1005-1039	Erie
C11	.01 µf 25 V +80 −20% Disc Ceramic	1005-1039	Erie
C12	.01 µf 25 V +80 −20% Disc Ceramic	1005-1039	Erie
C13	22 pf ±5% Dura-Mica	1001-0220	El Cap
C14	.01 µf 25 V +80 −20% Disc Ceramic	1005-1039	Erie
C15	150 pf ±5% Dura-Mica	1001-0151	El Cap
C16	27 pf ±5% Dura-Mica	1001-0270	El Cap
C17	.01 µf 25 V +80 −20% Disc Ceramic	1005-1039	Erie
C18	.01 µf 25 V +80 −20% Disc Ceramic	1005-1039	Erie
C19	18 pf ±5% Dura-Mica	1001-0180	El Cap
C20	75 pf ±5% Dura-Mica	1001-0750	El Cap
C21	.01 µf 25 V +80 −20% Disc Ceramic	1005-1039	Erie
C22	.01 µf 25 V +80 −20% Disc Ceramic	1005-1039	Erie
C23	Dual Channel Recv. Only		
C24	.01 µf 25 V +80 −20% Disc Ceramic	1005-1039	Erie
C25	.01 µf 25 V +80 −20% Disc Ceramic	1005-1039	Erie
C26	.01 µf 25 V +80 −20% Disc Ceramic	1005-1039	Erie
C27	.01 µf 25 V +80 −20% Disc Ceramic	1005-1039	Erie
C28	.01 µf 25 V +80 −20% Disc Ceramic	1005-1039	Erie
C29	.01 µf 25 V +80 −20% Disc Ceramic	1005-1039	Erie
C30	.01 µf 25 V +80 −20% Disc Ceramic	1005-1039	Erie
C31	1 µf 16 V Electrolytic	1010-0001	Sfigma
C32	100 µf ±5% Dura-Mica	1001-0101	El Cap
C33	240 pf ±5% Dura-Mica	1001-0241	El Cap
C34	820 pf Disc Ceramic	1005-0821	Erie
C35	100 µf 16 V Electrolytic	1010-0012	Sfigma
C36	.01 µf 25 V +80 −20% Disc Ceramic	1005-1039	Erie
C37	820 pf Disc Ceramic	1005-0821	Erie
C38	10 µf 16 V Electrolytic	1010-0011	Sfigma
C39	.01 µf 25 V +80 −20% Disc Ceramic	1005-1039	Erie
	Diode		
CR1	**Light Emitting**	1285-4487	H.P.
	Filters		
FL1	10.7 MHz Ceramic	1052-0107	Vernitron
FL2	10.7 MHz Ceramic	1052-0107	Vernitron
	Inductors		
L1	85 nH Coil, Variable	1501-0085	Paul Smith
L2	15 µH Choke, RF	1530-0150	Delevan
L3	85 nH Coil, Variable	1500-0085	Paul Smith

Single Channel FM Receiver (Continued) — **Model 780-08**

Ckt. Ref.	Description	TFT Stock No.	Mfg.
R38	27 KΩ ¼w ±5% Carbon Comp.	1065-2702	A.B.
R39	10 KΩ ¼w ±5% Carbon Comp.	1065-1002	A.B.
R40	4.7 KΩ ¼w ±5% Carbon Comp.	1065-4701	A.B.
R41	1 KΩ ¼w ±5% Carbon Comp.	1065-1001	A.B.
R42	1 KΩ ¼w ±5% Carbon Comp.	1065-1001	A.B.
R43	1.2 KΩ ¼w ±5% Carbon Comp.	1065-1201	A.B.
R44	1.2 KΩ ¼w ±5% Carbon Comp.	1065-1201	A.B.
	Transformers		
T1	10.7 MHz IF	1500-0107	Toko
T2	Audio	1500-0014	Grand
	Crystal		
	Dual Channel Recv. Only		
Y1	Crystal, 3rd Overtone (Factory Select)	2400-xxxx	Tedford
	Integrated Circuits		
Z1	Dual FET SD6000	1100-6000	Signetics
Z2	CA3089E	1100-3089	RCA
Z3	OP AMP 741	1100-0741	National
Z4	OP AMP 741	1100-0741	National
	Barrier Strip (10 position) P.C. MT	1700-0010	Kulka

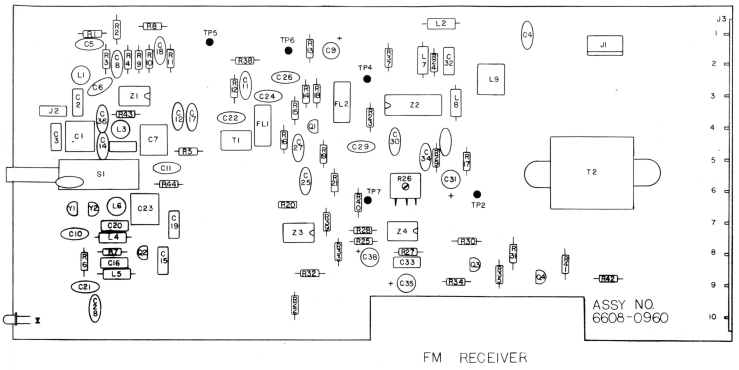

Single Channel FM Receiver (Continued) — **Model 780-08**

Ckt. Ref.	Description	TFT Stock No.	Mfg.
L4	1.5 µH Choke, RF	1530-0015	Delevan
L5	0.68 µH Choke, RF	1530-0680	Delevan
L6	85 nH Coil, Variable	1501-0085	Paul Smith
L7	15 µH Choke, RF	1530-0150	Delevan
L8	22 µH Choke, RF	1530-0022	Delevan
L9	2.2 µH Coil, Variable	1501-0225	Toko or TRW
J1	Connector, 4 position	2250-0004	Molex
J2	Connector, 2 position	2250-0020	Molex
	Transistors		
Q1	2N3563	1271-3563	Fairchild
Q2	2N3563	1271-3563	Fairchild
Q3	2N4275	1271-4275	Fairchild
Q4	2N4275	1271-4275	Fairchild
	Resistors		
R1	4.7 KΩ ¼w ±5% Carbon Comp.	1065-4701	A.B.
R2	39 KΩ ¼w ±5% Carbon Comp.	1065-3902	A.B.
R3	56 KΩ ¼w ±5% Carbon Comp.	1065-5602	A.B.
R4	56 KΩ ¼w ±5% Carbon Comp.	1065-5602	A.B.
R5	330 Ω ¼w ±5% Carbon Comp.	1065-0330	A.B.
R6	270 Ω ¼w ±5% Carbon Comp.	1065-0270	A.B.
R7	22 KΩ ¼w ±5% Carbon Comp.	1065-2202	A.B.
R8	150 KΩ ¼w ±5% Carbon Comp.	1065-1503	A.B.
R9	56 KΩ ¼w ±5% Carbon Comp.	1065-5602	A.B.
R10	56 KΩ ¼w ±5% Carbon Comp.	1065-5602	A.B.
R11	27 KΩ ¼w ±5% Carbon Comp.	1065-2702	A.B.
R12	270 Ω ¼w ±5% Carbon Comp.	1065-0270	A.B.
R13	390 Ω ¼w ±5% Carbon Comp.	1065-0390	A.B.
R14	3.9 KΩ ¼w ±5% Carbon Comp.	1065-3901	A.B.
R15	390 Ω ¼w ±5% Carbon Comp.	1065-0390	A.B.
R16	3.9 KΩ ¼w ±5% Carbon Comp.	1065-3901	A.B.
R17	56 KΩ ¼w ±5% Carbon Comp.	1065-5602	A.B.
R18	330 Ω ¼w ±5% Carbon Comp.	1065-0330	A.B.
R19	1 KΩ ¼w ±5% Carbon Comp.	1065-1001	A.B.
R20	47 KΩ ¼w ±5% Carbon Comp.	1065-4702	A.B.
R21	15 KΩ ¼w ±5% Carbon Comp.	1065-1502	A.B.
R22	1 KΩ ¼w ±5% Carbon Comp.	1065-1001	A.B.
R23	330 Ω ¼w ±5% Carbon Comp.	1065-0330	A.B.
R24	3.9 KΩ ¼w ±5% Carbon Comp.	1065-3901	A.B.
R25	68 KΩ ¼w ±5% Carbon Comp.	1065-6802	A.B.
R26	50 KΩ Potentiometer, 1 turn	1072-5002	Bourns
R27	270 KΩ ¼w ±5% Carbon Comp.	1065-2703	A.B.
R28	68 KΩ ¼w ±5% Carbon Comp.	1065-6802	A.B.
R29	5.6 KΩ ¼w ±5% Carbon Comp.	1065-5601	A.B.
R30	180 Ω ¼w ±5% Carbon Comp.	1065-0180	A.B.
R31	620 Ω ¼w ±5% Carbon Comp.	1065-0620	A.B.
R32	10 KΩ ¼w ±5% Carbon Comp.	1065-1002	A.B.
R33	2.7 KΩ ¼w ±5% Carbon Comp.	1065-2701	A.B.
R34	10 KΩ ¼w ±5% Carbon Comp.	1065-1002	A.B.
R35	10 KΩ ¼w ±5% Carbon Comp.	1065-1002	A.B.
R36	Deleted		
R37	27 KΩ ¼w ±5% Carbon Comp.	1065-2702	A.B.

Dual Channel FM Receiver Option — **Model 780-08**

Ckt. Ref.	Description	TFT Stock No.	Mfg.
	Capacitors		
C1	Variable, 2-19.3 pf #189-0507-005	1012-2193	E. F. Johnson
C2	27 pf Dur-Mica 500 V	1001-0270	El Menco
C7	Variable, 2-19.3 pf #189-0507-005	1012-2193	E. F. Johnson
C23	Variable, 2-19.3 pf #189-0507-005	1012-2193	E. F. Johnson
	Switch		
S1	Switch 4 PDT	1850-0010	IEE
	Crystal		
Y2	Crystal, 3rd Overtone (Factory Select)	2400-xxxx	

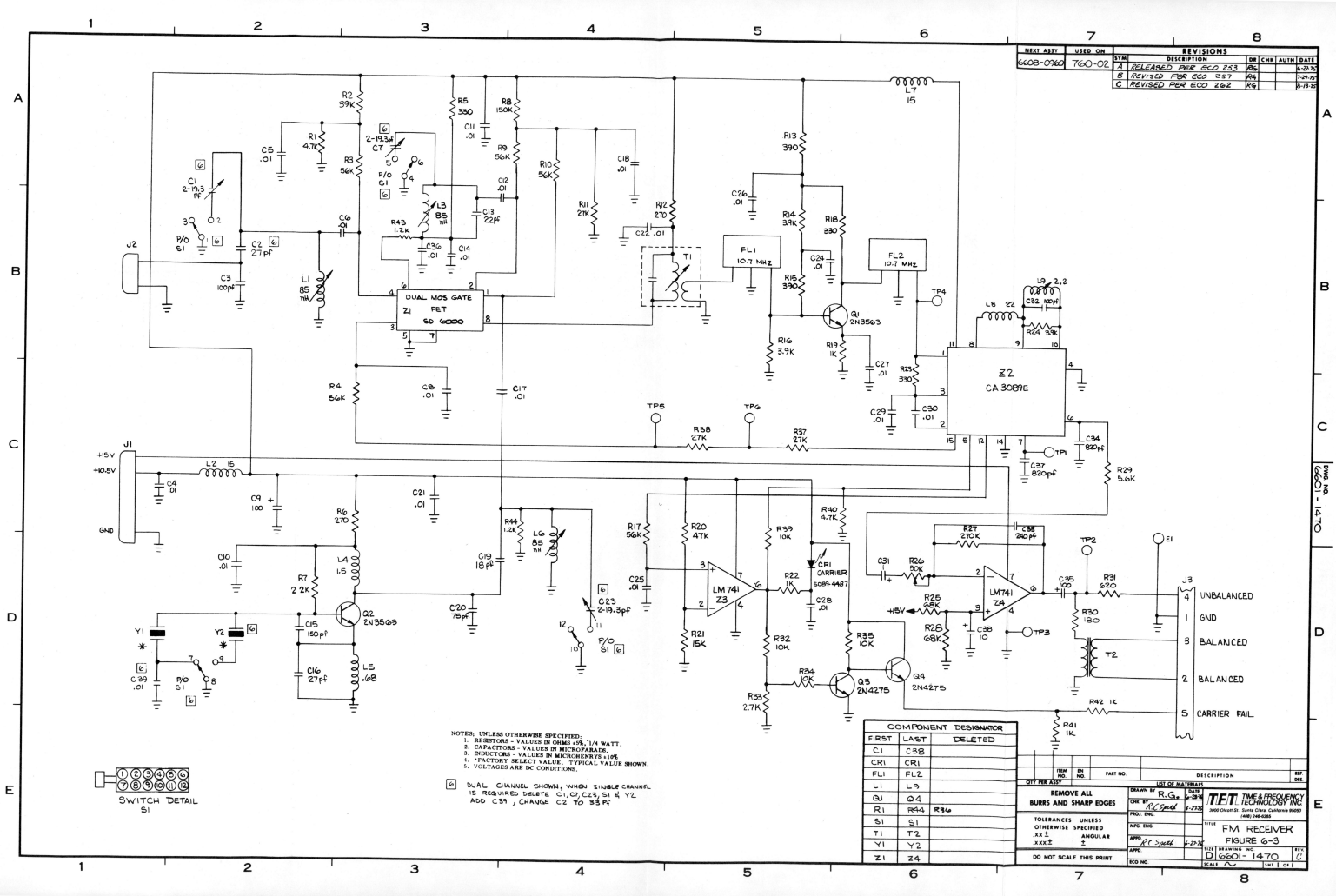

NEXT ASSY	USED ON
6608-0960	760-02

REVISIONS

SYM	DESCRIPTION	DR	CHK	AUTH	DATE
A	RELEASED PER ECO 253	RG			6-27-75
B	REVISED PER ECO 257	RG			7-29-75
C	REVISED PER ECO 262	RG			8-13-75

NOTES; UNLESS OTHERWISE SPECIFIED:
1. RESISTORS - VALUES IN OHMS ±5%, 1/4 WATT.
2. CAPACITORS - VALUES IN MICROFARADS.
3. INDUCTORS - VALUES IN MICROHENRYS ±10%
4. *FACTORY SELECT VALUE. TYPICAL VALUE SHOWN.
5. VOLTAGES ARE DC CONDITIONS.

6 DUAL CHANNEL SHOWN, WHEN SINGLE CHANNEL IS REQUIRED DELETE C1, C7, C23, S1 & Y2 ADD C39, CHANGE C2 TO 33 PF

COMPONENT DESIGNATOR

FIRST	LAST	DELETED
C1	C38	
CR1	CR1	
FL1	FL2	
L1	L9	
Q1	Q4	
R1	R44	R36
S1	S1	
T1	T2	
Y1	Y2	
Z1	Z4	

QTY PER ASSY	ITEM NO.	EN NO.	PART NO.	DESCRIPTION	REF. DES.

LIST OF MATERIALS

REMOVE ALL BURRS AND SHARP EDGES

TOLERANCES UNLESS OTHERWISE SPECIFIED
.XX ± ANGULAR
.XXX ± ±

DO NOT SCALE THIS PRINT

DRAWN BY R.G. DATE 6-29-75
CHK. BY R.C. Spark 6-27-75
PROJ. ENG.
MFG. ENG.
APPD. R.C. Spark 6-27-75
APPD.
ECO NO.

TFT TIME & FREQUENCY TECHNOLOGY INC.
3000 Olcott St., Santa Clara, California 95050
(408) 246-6365

TITLE FM RECEIVER FIGURE 6-3

SIZE D DRAWING NO. 6601-1470 REV. C
SCALE ~ SHT 1 OF 1

DWG. NO. 6601-1470

Two Tone Generator **Model 780-04**

Ckt. Ref.	Description	TFT Stock No.	Mfg.
	P.C. Board Tone Generator	1600-0940	TFT
	Capacitors		
C1	33 pf ±5% Disc Ceramic	1005-0330	Sprague
C2	1000 pf ±5% Disc Ceramic	1005-1000	Sprague
C3	.05 uf +80 −20% Disc Ceramic	1005-5039	Sprague
C4	470 pf ± 5% Dipped Mica	1001-0471	Elmp
C5	.05 uf +80 −20% Ceramic Disc	1005-5039	Erie
C6	.1 uf ±10% Mylar	1007-0001	Sigma
C7	.047 uf ±10% Mylar	1007-0470	Sigma
C8	.22 uf ±10% Mylar	1007-0220	Sigma
C9	.0012 uf ±10% Mylar	1007-0012	Sigma
C10	.05 uf +80 −20% Disc Ceramic	1005-5039	Erie
C11	.1 uf ±10% Mylar	1007-0001	Sigma
C12	.047 uf ±10% Mylar	1007-0470	Sigma
C13	.22 uf ±10% Mylar	1007-0220	Sigma
C14	.0012 uf ±10% Mylar	1007-0012	Sigma
C15	10 uf 16 V Electrolitic	1010-0011	Sigma
C16	10 uf 16 V Electrolytic	1010-0011	Sigma
C17	10 uf 16 V Electrolytic	1010-0011	Sigma
C18	.05 uf +80 −20 Disc Ceramic	1005-5039	Erie
C19	100 uf 25 V Electrolytic	1010-0012	Sigma
C20	1 uf 16 V Electrolytic	1010-0001	Sigma
C21	.1 uf ±10% Mylar	1007-0001	Sigma
C23	220 pf Dura-Mica	1001-0221	Elmp
C22	.1 uf ±10% Mylar	1007-0001	Sigma
	Diodes		
CR1	IN 4002	1284-4487	Motorola
CR2	LED (5082-4487)	1285-4487	H P
CR3	LED (5082-4487)	1285-4487	H P
	Transistors		
Q1	2N3567	1271-3567	Fairchild
Q2	2N3563	1271-3563	Fairchild
Q3	2N4275	1271-4275	Fairchild
	Resistors		
R1	3.3 KΩ ½w ±5% Carbon Comp.	1065-3301	A.B.
R2	1.5 KΩ ½w ±5% Carbon Comp.	1065-1501	A.B.
R3	390 Ω ½w ±5% Carbon Comp.	1065-0390	A.B.
R4	180 Ω ½w ±5% Carbon Comp.	1065-0180	A.B.
R5	4.7 KΩ ½w ±5% Carbon Comp.	1065-4701	A.B.
R6	12 KΩ ½w ±5% Carbon Comp.	1065-1202	A.B.
R7	1 KΩ ½w ±5% Carbon Comp.	1065-1001	A.B.
R8	12 KΩ ½w ±5% Carbon Comp.	1065-1202	A.B.
R9	12 KΩ ½w ±5% Carbon Comp.	1065-1202	A.B.
R10	12 KΩ ½w ±5% Carbon Comp.	1065-1202	A.B.
R11	12 KΩ ½w ±5% Carbon Comp.	1065-1202	A.B.
R12	12 KΩ ½w ±5% Carbon Comp.	1065-1202	A.B.
R13	12 KΩ ½w ±5% Carbon Comp.	1065-1202	A.B.
R14	12 KΩ ½w ±5% Carbon Comp.	1065-1202	A.B.
R15	12 KΩ ½w ±5% Carbon Comp.	1065-1202	A.B.
R16	12 KΩ ½w ±5% Carbon Comp.	1065-1202	A.B.
R17	12 KΩ ½w ±5% Carbon Comp.	1065-1202	A.B.

Two Tone Generator (Continued) **Model 780-04**

Ckt. Ref.	Description	TFT Stock No.	Mfg.
R18	12 KΩ ½w ±5% Carbon Comp.	1065-1202	A.B.
R19	12 KΩ ½w ±5% Carbon Comp.	1065-1202	A.B.
R20	2 KΩ ±10% Single Turn Pot	1069-0202	Piher
R21	5.6 KΩ ½w ±5% Carbon Comp.	1065-5601	A.B.
R22	5.6 KΩ ½w ±5% Carbon Comp.	1065-5601	A.B.
R23	2 KΩ ±10% Single Turn Pot	1069-0202	Piher
R24	10 KΩ ±10% Single Turn Pot	1069-0103	Piher
R25	12 KΩ ½w ±5% Carbon Comp.	1065-1201	A.B.
R26	620 Ω ½w ±5% Carbon Comp.	1065-0620	A.B.
R27	620 Ω ½w ±5% Carbon Comp.	1065-0620	A.B.
R28	51 Ω ½w ±5% Carbon Comp.	1065-0051	A.B.
R29	2.7 Ω ½w ±5% Carbon Comp.	1065-2700	A.B.
R30	820 Ω ½w ±5% Carbon Comp.	1065-0820	A.B.
R31	1 KΩ ½w ±5% Carbon Comp.	1065-1001	A.B.
R32	12 KΩ ½w ±5% Carbon Comp.	1065-1202	A.B.
R33	12 KΩ ½w ±5% Carbon Comp.	1065-1202	A.B.
R34	12 KΩ ½w ±5% Carbon Comp.	1065-1202	A.B.
R35	820 Ω ½w ±5% Carbon Comp.	1065-0820	A.B.
R36	910 Ω ½w ±5% Carbon Comp.	1065-0910	A.B.
R37	12 KΩ ½w ±5% Carbon Comp.	1065-1202	A.B.
	Switches		
SW1	Momentary Twin Position (SPDT)	1800-0105	C & K
SW2	Momentary Twin Position (SPDT)	1800-0105	C & K
SW3	Momentary Twin Position (SPDT)	1800-0105	C & K
SW4	Momentary Twin Position (SPDT)	1800-0105	C & K
	Integrated Circuits		
Z1	SN7400	1100-7400	T.I.
Z2	SN7400	1100-7400	T.I.
Z3	SN7476	1100-7476	T.I.
Z4	SN7490	1100-7490	T.I.
Z5	SN7490	1100-7490	T.I.
Z6	SN7490	1100-7490	T.I.
Z7	SN7490	1100-7490	T.I.
Z8	SN7476	1100-7476	T.I.
Z9	SN7490	1100-7490	T.I.
Z10	SN7490	1100-7490	T.I.
Z11	SN7490	1100-7490	T.I.
Z12	SN7420	1100-7420	T.I.
Z13	SN7472	1100-7472	T.I.
Z14	SN7490	1100-7490	T.I.
Z15	SN7492	1100-7492	T.I.
Z16	SN7493	1100-7493	T.I.
Z17	LM 380	1100-0381	National
Z18	LM 741-CN	1100-0741	National
Z19	LM 741-CN	1100-0741	National
	Transformer		
T1	Audio Transformer 200 Ω CT to 600Ω	1500-0014	Grand
Y1	Crystal 3.27652 MHz	2400-3275	Monitor
	Connector		
	4 pin connector	2250-0004	Molex
	10 Position Terminal Strip	1700-0010	Kulka
K1	Relay DPDT 12 V Coil	1880-0004	American Zettler

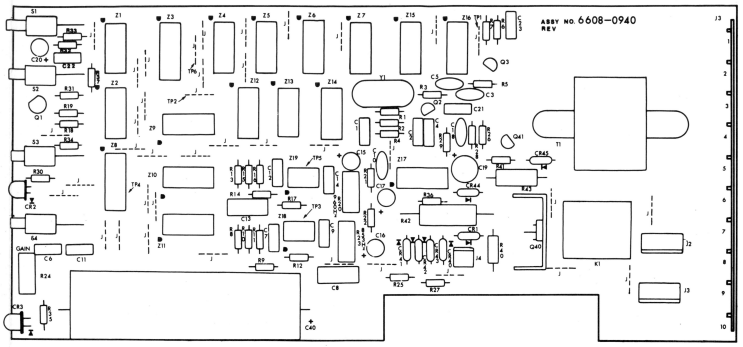

TONE GENERATOR

Two Tone Generator (Continued) **Model 780-04**

Ckt. Ref.	Description	TFT Stock No.	Mfg.
	(EBS Tone Gen. Power Supply)		
	Capacitor		
C40	4000 uf 25 V Electrolytic	1010-0402	Sprague
	Diodes		
CR40	IN 4002 Silicone	1284-4002	Motorola
CR41	IN 4002 Silicone	1284-4002	Motorola
CR42	IN 4002 Silicone	1284-4002	Motorola
CR43	IN 4002 Silicone	1284-4002	Motorola
CR44	IN 4734 Zener 5.6V	1283-4734	Motorola
CR45	IN 4741 Zener 11 V	1283-4741	Motorola
	Transistors		
Q40	MJE 521	1272-0521	Motorola
Q41	2N3567	1271-3567	Fairchild
	Resistors		
R40	330Ω ± 10% ½w Carbon Comp.	1067-0330	A.B.
R41	220 Ω ½w ±5% Carbon Comp.	1065-0220	A.B.
R42	22 Ω ±5% 3 w Carbon Comp.	1068-0022	Dale
R43	1.5 Ω ±5% 3 w Carbon Comp.	1068-0015	Dale
	2 Pin Molex Connector	2250-0020	Molex
	Heat Sink	2010-6030	Thermalloy

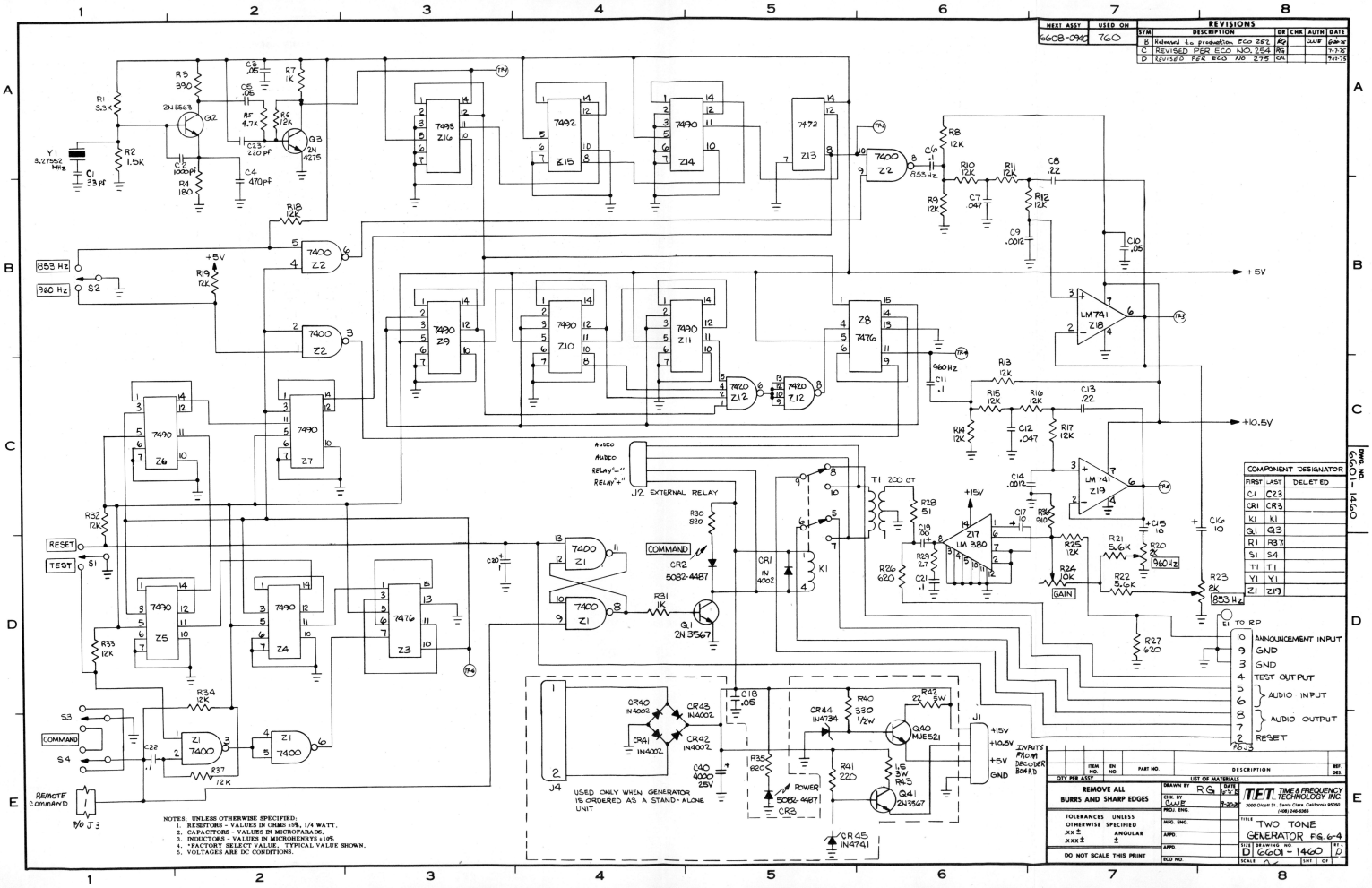

NEXT ASSY 6608-0940
USED ON 760
REVISIONS
SYM DESCRIPTION DR CHK AUTH DATE
B Released to production ECO 252 RG CWF 6-20-75
C REVISED PER ECO NO. 254 RG 7-7-75
D REVISED PER ECO NO 275 CH 7-12-75
DWG NO 6601-1460
COMPONENT DESIGNATOR
FIRST LAST DELETED
C1 C23
CR1 CR3
K1 K1
Q1 Q3
R1 R37
S1 S4
T1 T1
Y1 Y1
Z1 Z19
J2 EXTERNAL RELAY
AUDIO
AUDIO
RELAY "-"
RELAY "+"
COMMAND
RESET
TEST
GAIN
E1 TO RP
ANNOUNCEMENT INPUT
GND
GND
TEST OUTPUT
AUDIO INPUT
AUDIO OUTPUT
RESET
J4
USED ONLY WHEN GENERATOR IS ORDERED AS A STAND-ALONE UNIT
POWER
INPUTS FROM DECODER BOARD
REMOTE COMMAND
B/O J3
NOTES; UNLESS OTHERWISE SPECIFIED:
1. RESISTORS - VALUES IN OHMS ±5%, 1/4 WATT.
2. CAPACITORS - VALUES IN MICROFARADS.
3. INDUCTORS - VALUES IN MICROHENRYS ±10%
4. *FACTORY SELECT VALUE. TYPICAL VALUE SHOWN.
5. VOLTAGES ARE DC CONDITIONS.
QTY PER ASSY
ITEM NO.
EN NO.
PART NO.
DESCRIPTION
REF. DES.
LIST OF MATERIALS
REMOVE ALL BURRS AND SHARP EDGES
TOLERANCES UNLESS OTHERWISE SPECIFIED
.XX ± ANGULAR
.XXX ± ±
DO NOT SCALE THIS PRINT
DRAWN BY RG
CHK. BY CWF
PROJ. ENG.
MFG. ENG.
APPD.
APPD.
ECO NO.
T.F.T. TIME & FREQUENCY TECHNOLOGY INC
2000 Olcott St. Santa Clara, California 95050
(408) 246-6365
TITLE TWO TONE GENERATOR FIG. 6-4
SIZE D
DRAWING NO. 6601-1460
REV. D
SCALE
SHT 1 OF 1

Tone Decoder **Model 780-03**

Ckt. Ref.	Description	TFT Stock No.	Mfg.
	P.C. Board Tone Decoder	1600-0930	TFT
	Capacitors		
C1	1 µf 16 V Electrolytic	1010-0001	Sbigma
C2	1 µf 16 V Electrolytic	1010-0001	Sbigma
C3	1 µf 16 V Electrolytic	1010-0001	Sbigma
C4	1 µf 16 V Electrolytic	1010-0001	Sbigma
C5	1 µf 16 V Electrolytic	1010-0001	Sbigma
C6	1 µf 16 V Electrolytic	1010-0001	Sbigma
C7	1 µf 16 V Electrolytic	1010-0001	Sbigma
C8	1 µf 16 V Electrolytic	1010-0001	Sbigma
C9	1 µf 16 V Electrolytic	1010-0001	Sbigma
C10	1 µf 16 V Electrolytic	1010-0001	Sbigma
C11	1 µf 16 V Electrolytic	1010-0001	Sbigma
C12	.05 µf Disc Ceramic	1005-5039	Erie
C13	100 µf ±10% Tant.	1008-0102	Sprague
C14	.05 µf Disc Ceramic	1005-5039	Erie
C15	.1 µf Mylar	1007-0001	Sbigma
C16	12 pf Disc Cermaic	1005-0120	Sprague
C17	1 µf 16 V Electrolitic	1010-0001	Sbigma
C18	100 µf 25 V Electrolytic	1010-0012	Sbigma
C19	.1 µf Mylar	1007-0001	Sbigma
C20	100 µf 25 V Electrolytic	1010-0012	Sbigma
C21	8000 µf 25 V Electrolytic	1010-8000	Elmp
C22	100 µf 25 V Electrolytic	1010-0012	Sbigma
	Diodes		
CR1	IN 3064	1281-3064	Motorola
CR2	IN 3064	1281-3064	Motorola
CR3	L.E.D. (5082-4487)	1285-4487	H.P.
CR4	L.E.D. (5082-4487)	1285-4487	H.P.
CR5	L.E.D. (5082-4487)	1285-4487	H.P.
CR6	MR 501	1281-0501	Motorola
CR7	MR 501	1281-0501	Motorola
CR8	MR 501	1281-0501	Motorola
CR9	MR 501	1281-0501	Motorola
CR10	IN 4741A Zener	1283-4741	Motorola
CR11	IN 4734A Zener	1283-4734	Motorola
CR12	IN 4002	1284-4002	Motorola
CR13	IN 3064	1281-3064	Motorola
	Fuse		
F1	Fuse, 2 amp. Slo-Blo	1900-0002	Fusetron
	Relay		
K1	Relay (AZ 330-08-1)	1880-0003	American Zettler
	Transistors		
Q1	2N3565	1271-3565	Fairchild
Q2	2N3565	1271-3565	Fairchild
Q3	2N3565	1271-3565	Fairchild
Q4	2N3565	1271-3565	Fairchild
Q5	2N4121	1271-4121	Fairchild
Q6	2N3567	1271-3567	Fairchild
Q7	2N3060	1271-3060	Fairchild
Q8	MJE 521	1271-0521	Motorola
Q9	MJE 521	1271-0521	Motorola

Tone Decoder (Continued) **Model 780-03**

Ckt. Ref.	Description	TFT Stock No.	Mfg.
J1	Connector 4 pin	2250-0004	Molex
J2	Barrier Strip (10 position)	1700-0010	Kulka
J3	Connector 4 pin	2250-0004	Molex
J4	Connector 2 pin	2250-0020	Molex
	Heatsink	2010-1401	Aham
	Screw 4-40 x ½ Lg. Phillips Hd.	2104-0001	
	Key Nut 4-40	2111-0001	
	Tie Wrap	2140-0004	

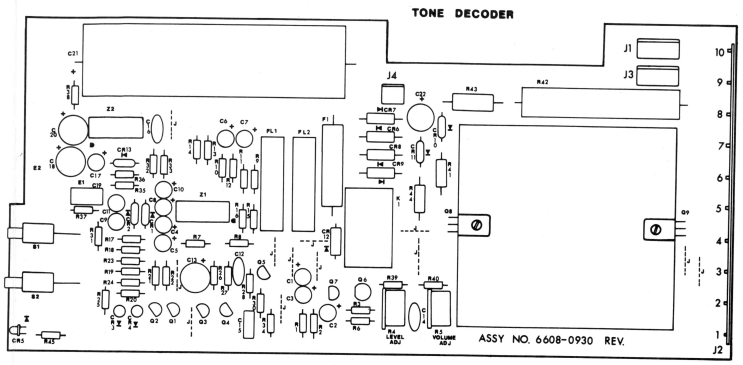

Tone Decoder (Continued) **Model 780-03**

Ckt. Ref.	Description	TFT Stock No.	Mfg.
	Resistors		
R1	22 KΩ ¼w ±5% Carbon Comp.	1065-2202	A.B.
R2	270 KΩ ¼w ±5% Carbon Comp.	1065-2703	A.B.
R3	12 KΩ ¼w ±5% Carbon Comp.	1065-1202	A.B.
R4	2 KΩ Potentiometer	1069-0202	Phier
R5	2 KΩ Potentiometer	1069-0202	Phier
R6	10 KΩ ¼w ±5% Carbon Comp.	1065-1002	A.B.
R7	470 KΩ ¼w ±5% Carbon Comp.	1065-4703	A.B.
R8	1 MEGΩ ¼w ±5% Carbon Comp.	1065-1004	A.B.
R9	270 KΩ ¼w ±5% Carbon Comp.	1056-2703	A.B.
R10	270 KΩ ¼w ±5% Carbon Comp.	1065-2703	A.B.
R11	270 KΩ ¼w ±5% Carbon Comp.	1065-2703	A.B.
R12	270 KΩ ¼w ±5% Carbon Comp.	1065-2703	A.B.
R13	470 KΩ ¼w ±5% Carbon Comp.	1065-4703	A.B.
R14	470 KΩ ¼w ±5% Carbon Comp.	1065-4703	A.B.
R15	1 MEGΩ ¼w ±5% Carbon Comp.	1065-1004	A.B.
R16	1 MEGΩ ¼w ±5% Carbon Comp.	1065-1004	A.B.
R17	4.7 KΩ ¼w ±5% Carbon Comp.	1065-4701	A.B.
R18	4.7 KΩ ¼w ±5% Carbon Comp.	1065-4701	A.B.
R19	4.7 KΩ ¼w ±5% Carbon Comp.	1065-4701	A.B.
R20	47 KΩ ¼w ±5% Carbon Comp.	1065-4702	A.B.
R21	2.2 KΩ ¼w ±5% Carbon Comp.	1065-2201	A.B.
R22	2.2 KΩ ¼w ±5% Carbon Comp.	1065-2201	A.B.
R23	4.7 KΩ ¼w ±5% Carbon Comp.	1065-4701	A.B.
R24	47 KΩ ¼w ±5% Carbon Comp.	1065-4702	A.B.
R25	4.7 KΩ ¼w ±5% Carbon Comp.	1065-4701	A.B.
R26	150 KΩ ¼w ±5% Carbon Comp.	1065-1503	A.B.
R27	4.7 KΩ ¼w ±5% Carbon Comp.	1065-4701	A.B.
R28	2.2 KΩ ¼w ±5% Carbon Comp.	1065-2201	A.B.
R29	Deleted		
R30	4.7 KΩ ¼w ±5% Carbon Comp.	1065-4701	A.B.
R31	10 KΩ ¼w ±5% Carbon Comp.	1065-1002	A.B.
R32	10 KΩ ¼w ±5% Carbon Comp.	1065-1002	A.B.
R33	4.7 KΩ ¼w ±5% Carbon Comp.	1065-4701	A.B.
R34	2.2 KΩ ¼w ±5% Carbon Comp.	1065-2201	A.B.
R35	22 KΩ ¼w ±5% Carbon Comp.	1065-2202	A.B.
R36	3.3 KΩ ¼w ±5% Carbon Comp.	1065-3301	A.B.
R37	2.7 Ω ¼w ±5% Carbon Comp.	1065-2706	A.B.
R38	10 Ω ¼w ±5% Carbon Comp.	1065-0010	A.B.
R39	750 Ω ¼w ±5% Carbon Comp.	1065-0750	A.B.
R40	750 Ω ¼w ±5% Carbon Comp.	1065-0750	A.B.
R41	1.5 Ω ¼w ±5% Carbon Comp.	1065-0015	A.B.
R42	5 Ω 10w ±10%	1068-0005	IRC
R43	220 Ω ¼w ±5% Carbon Comp.	1067-0220	A.B.
R44	120 Ω ¼w ±5% Carbon Comp.	1067-0121	A.B.
R45	330 Ω ¼w ±5% Carbon Comp.	1065-0330	A.B.
	Switches		
S1	2 Position (SPDT)	1800-0101	C & K
S2	Momentary (SPDT)	1800-0105	C & K
	Integrated Circuits		
Z1	LM3900N	1100-3900	National
Z2	LM380N	1100-0381	National

NEXT ASSY	USED ON
6608-0930	760-03

REVISIONS

SYM	DESCRIPTION	DR	CHK	AUTH	DATE
F	REVISED & REDRAWN PER ECO 266	RG			8-20-75

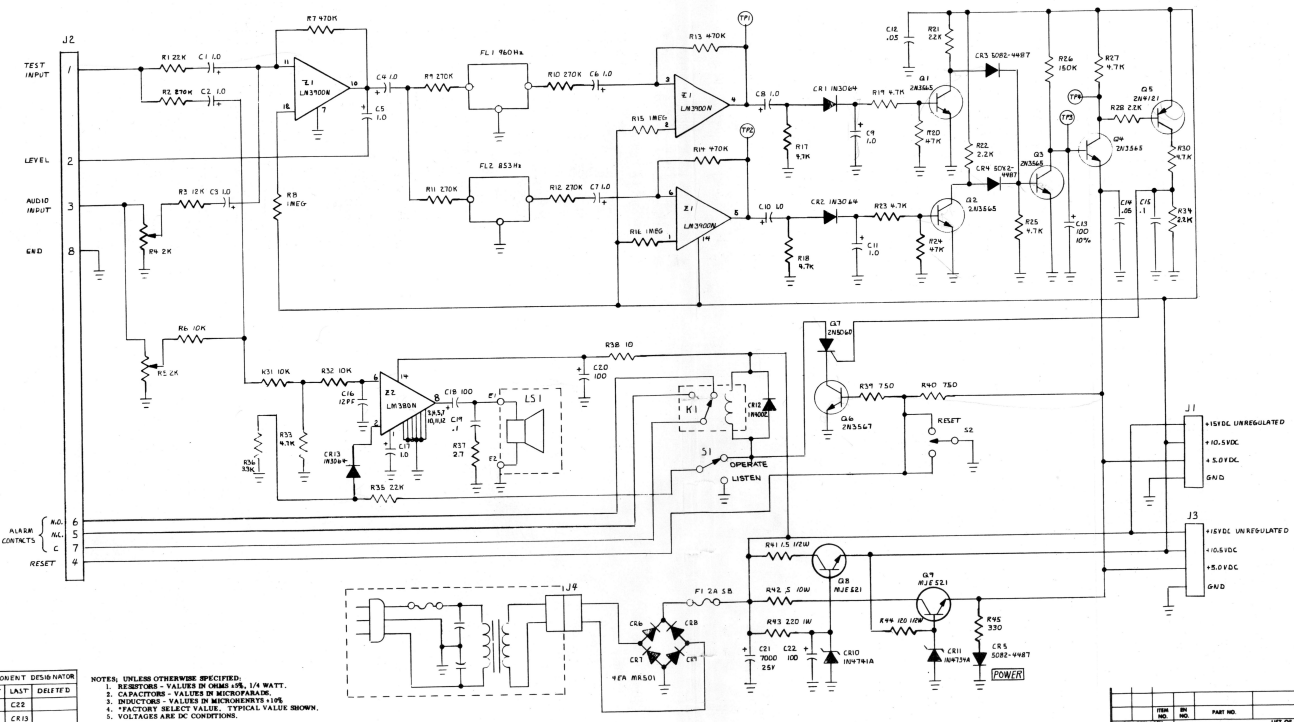

COMPONENT DESIGNATOR		
FIRST	LAST	DELETED
C1	C22	
CR1	CR13	
K1	K1	
Q1	Q9	
R1	R45	R29
S1	S2	
Z1	Z2	
FL1	FL2	
F1	F1	
J1	J4	

NOTES; UNLESS OTHERWISE SPECIFIED:
1. RESISTORS - VALUES IN OHMS ±5%, 1/4 WATT.
2. CAPACITORS - VALUES IN MICROFARADS.
3. INDUCTORS - VALUES IN MICROHENRYS ±10%
4. *FACTORY SELECT VALUE. TYPICAL VALUE SHOWN.
5. VOLTAGES ARE DC CONDITIONS.

ITEM NO.	SH NO.	PART NO.	DESCRIPTION	REF. DES.

QTY PER ASSY — LIST OF MATERIALS

REMOVE ALL BURRS AND SHARP EDGES

TOLERANCES UNLESS OTHERWISE SPECIFIED .XX ± .XXX ± ANGULAR ±

DO NOT SCALE THIS PRINT

DRAWN BY C.D. LONG JR — DATE 8-1-75
CHK. BY C.D. LONG JR — 8-25-75
PROJ. ENG.
MFG. ENG.
APPD.
APPD.
ECO NO.

TFT TIME & FREQUENCY TECHNOLOGY INC.
3000 Olcott St., Santa Clara, California 95050
(408) 248-6365

TITLE: EBS TONE DECODER FIGURE 6-5

SIZE D — DRAWING NO. 6601-1440 — REV. F

SCALE — SHT. OF

DWG. NO. 6601-1440

Dual Purpose Tone Decoder **Model 760-05**

Ckt. Ref.	Description	TFT Stock No.	Mfg.
	P.C. Board Dual Purpose Tone Decoder	1600-0970	TFT
	Capacitors		
C1	1 μf 16 V Electrolytic	1010-0001	Sfugma
C2	1 μf 16 V Electrolytic	1010-0001	Sfugma
C3	.05 μf Disc Ceramic	1005-5039	Erie
C4	1 μf 16 V Electrolytic	1010-0001	Sfugma
C5	1 μf 16 V Electrolytic	1010-0001	Sfugma
C6	1 μf 16 V Electrolytic	1010-0001	Sfugma
C7	1 μf 16 V Electrolytic	1010-0001	Sfugma
C8	1 μf 16 V Electrolytic	1010-0001	Sfugma
C9	1 μf 16 V Electrolytic	1010-0001	Sfugma
C10	1 μf 16 V Electrolytic	1010-0001	Sfugma
C11	1 μf 16 V Electrolytic	1010-0001	Sfugma
C12	Deleted		
C13	100 μf ±10% Tant.	1008-0102	Sprague
C14	.05 μf Disc Ceramic	1005-5039	Erie
C15	1 μf ±10% Mylar	1007-0001	Sfugma
C16	1 μf ±10% Mylar	1007-0001	Sfugma
C17	4.7 μf Electrolytic	1010-0047	Sfugma
C18	2.2 μf Electrolytic	1010-0022	Sfugma
C19	470 μf Electrolytic	1010-0471	Sfugma
C20	1 μf ±10% Mylar	1007-0001	Sfugma
C21	12 μf Disc Ceramic	1005-0120	Sfugma
C22	1 μf 16 V Electrolytic	1010-0001	Sfugma
C23	1 μf ±10% Mylar	1007-0001	Sfugma
C24	100 μf 25 V Electrolytic	1010-0012	Sfugma
C25	25 μf Electrolytic	1010-0250	Sfugma
C26	100 μf 25 V Electrolytic	1010-0012	Sfugma
C27	8000 μf 25 V Electrolytic	1010-8000	El Cap
C28	100 μf 25V Electrolytic	1010-0012	Sfugma
C29	220 μf 16 V Electrolytic	1010-0221	Sfugma
	Diodes		
CR1	IN 3064	1281-3064	Motorola
CR2	IN 3064	1281-3064	Motorola
CR3	LED (5082-4487)	1284-4487	H.P.
CR4	LED (5082-4487)	1284-4487	H.P.
CR5	IN 4002	1284-4002	Motorola
CR6	IN 3064	1281-3064	Motorola
CR7	IN 3064	1281-3064	Motorola
CR8	IN 3064	1281-3064	Motorola
CR9	MR 501	1281-0501	Motorola
CR10	MR 501	1281-0501	Motorola
CR11	MR 501	1281-0501	Motorola
CR12	MR 501	1281-0501	Motorola
CR13	IN 4741A	1283-4741	Motorola
CR14	IN 4734A	1283-4734	Motorola
CR15	LED (5082-4487)	1283-4487	H.P.
CR16	IN 3064	1281-3064	Motorola
	Fuse		
F1	2 AMP Slo-Blo	1900-0002	Fuetron
	Relay		
K1	**Reed 8PDT**	1880-0003	American Zettler

Dual Purpose Tone Decoder (Continued) **Model 760-05**

Ckt. Ref.	Description	TFT Stock No.	Mfg.
R37	750 Ω ¼w ±5% Carbon Comp.	1065-0750	A.B.
R38	10 KΩ ¼w ±5% Carbon Comp.	1065-1002	A.B.
R39	2.2 KΩ ¼w ±5% Carbon Comp.	1065-2201	A.B.
R40	3.9 KΩ ¼w ±5% Carbon Comp.	1065-3901	A.B.
R41	150 KΩ ¼w ±5% Carbon Comp.	1065-1503	A.B.
R42	10 KΩ ¼w ±5% Carbon Comp.	1065-1002	A.B.
R43	470 Ω ¼w ±5% Carbon Comp.	1065-0470	A.B.
R44	470 Ω ¼w ±5% Carbon Comp.	1065-0470	A.B.
R45	1 KΩ ¼w ±5% Carbon Comp.	1065-1001	A.B.
R46	1.5 KΩ ¼w ±5% Carbon Comp.	1065-1501	A.B.
R47	10 KΩ ¼w ±5% Carbon Comp.	1065-1002	A.B.
R48	1 KΩ ¼w ±5% Carbon Comp.	1065-1001	A.B.
R49	3.3 KΩ ¼w ±5% Carbon Comp.	1065-3301	A.B.
R50	10 KΩ ¼w ±5% Carbon Comp.	1065-1002	A.B.
R51	4.7 KΩ ¼w ±5% Carbon Comp.	1065-4701	A.B.
R52	4.7 KΩ ¼w ±5% Carbon Comp.	1065-4701	A.B.
R53	12 KΩ ¼w ±5% Carbon Comp.	1-65-1202	A.B.
R54	27 KΩ ¼w ±5% Carbon Comp.	1065-2702	A.B.
R55	2.7 KΩ ¼w ±5% Carbon Comp.	1065-2700	A.B.
R56	22 KΩ ¼w ±5% Carbon Comp.	1065-2202	A.B.
R57	10 Ω ¼w ±5% Carbon Comp.	1065-0010	A.B.
R58	1.2 MΩ ¼w ±5% Carbon Comp.	1065-1204	A.B.
R59	12 KΩ ¼w ±5% Carbon Comp.	1065-1202	A.B.
R60	1.2 MΩ ¼w ±5% Carbon Comp.	1065-1204	A.B.
R61	1.5Ω ½w ±5% Carbon Comp.	1067-0015	A.B.
R62	5 Ω 10w ±10% W. W.	1068-0005	IRC
R63	220 Ω 1w ±5% Carbon Comp.	1067-0220	A.B.
R64	120 Ω ½w ±5% Carbon Comp.	1067-0121	A.B.
R65	330 Ω ¼w ±5% Carbon Comp.	1065-0330	A.B.
R66	12 KΩ ¼w ±5% Carbon Comp.	1065-1202	A.B.
R67	27 KΩ ¼w ±5% Carbon Comp.	1065-2702	A.B.
R68	12 KΩ ¼w ±5% Carbon Comp.	1065-1202	A.B.
R69	1.2 MΩ ¼w ±5% Carbon Comp.	1065-1204	A.B.
R70	1.2 MΩ ¼w ±5% Carbon Comp.	1065-1204	A.B.
R71	150 Ω ¼w ±5% Carbon Comp.	1065-0150	A.B.
	Switches		
S1	2 Position DTDP	1800-0101	C & K
S2	Momentary DTDP	1800-0105	C & K
	Integrated Circuits		
Z1	LM3900N	1100-3900	National
Z2	NE567	1100-0567	National
Z3	SN7400	1100-7400	T.I.
Z4	LM3900N	1100-3900	National
Z5	SN7476	1100-7476	T.I.
Z6	LM380N	1100-0381	National
J1	Connector, 4 pin	2250-0004	Molex
J2	Barrier Strip 8/10 Position	1700-0010	Kulka
J3	Connector, 4 pin	2250-0004	Molex
J4	Connector, 2 pin	2250-0020	Molex
	Tie Wrap	2140-0004	
	Heat Sink	2010-1401	Aham

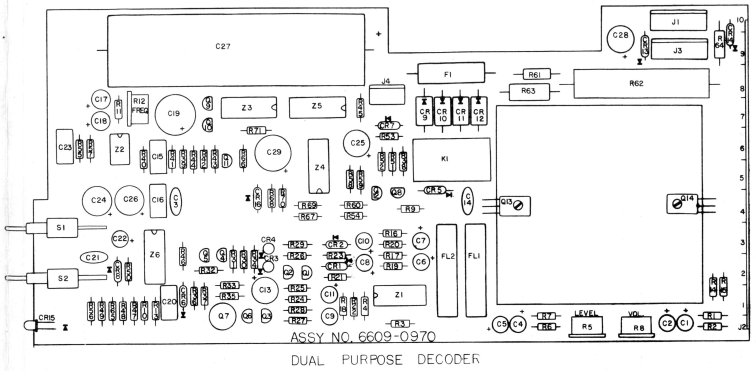

Dual Purpose Tone Decoder (Continued) **Model 760-05**

Ckt. Ref.	Description	TFT Stock No.	Mfg.
	Transistors		
Q1	2N3565	1271-3565	Fairchild
Q2	2N3565	1271-3565	Fairchild
Q3	2N3565	1271-3565	Fairchild
Q4	2N3565	1271-3565	Fairchild
Q5	2N4121	1271-4121	Fairchild
Q6	2N3060	1271-3060	Motorola
Q7	2N3567	1271-3567	Fairchild
Q8	2N4275	1271-4275	Fairchild
Q9	2N4275	1271-4275	Fairchild
Q10	2N3565	1271-3565	Fairchild
Q11	2N4121	1271-4121	Fairchild
Q12	2N4275	1271-4275	Fairchild
Q13	MJE 521	1271-0521	Motorola
Q14	MJE 521	1271-0521	Motorola
	Resistors		
R1	22 KΩ ¼w ±5% Carbon Comp.	1065-2202	A.B.
R2	270 KΩ ¼w ±5% Carbon Comp.	1065-2703	A.B.
R3	470 KΩ ¼w ±5% Carbon Comp.	1065-4703	A.B.
R4	1 MEGΩ ¼w ±5% Carbon Comp.	1065-1004	A.B.
R5	2 KΩ ±10% Single Turn Pot.	1069-0202	Piher
R6	12 KΩ ¼w ±5% Carbon Comp.	1065-1202	A.B.
R7	10 KΩ ¼w ±5% Carbon Comp.	1065-1002	A.B.
R8	2 KΩ ±10% Single Turn Pot.	1069-0202	Piher
R9	15 KΩ ¼w ±5% Carbon Comp.	1065-1502	A.B.
R10	2.2 KΩ ¼w ±5% Carbon Comp.	1065-2201	A.B.
R11	7.5 KΩ ¼w ±5% Carbon Comp.	1065-7501	A.B.
R12	5 KΩ ±10% Single Turn Pot	1069-0502	Piher
R13	4.7 KΩ ¼w ±5% Carbon Comp.	1065-4701	A.B.
R14	270 KΩ ¼w ±5% Carbon Comp.	1065-2703	A.B.
R15	270 KΩ ¼w ±5% Carbon Comp.	1065-2703	A.B.
R16	270 KΩ ¼w ±5% Carbon Comp.	1065-2703	A.B.
R17	270 KΩ ¼w ±5% Carbon Comp.	1065-2703	A.B.
R18	1 MEGΩ ¼w ±5% Carbon Comp.	1065-1004	A.B.
R19	470 KΩ ¼w ±5% Carbon Comp.	1065-4703	A.B.
R20	470 KΩ ¼w ±5% Carbon Comp.	1065-4703	A.B.
R21	4.7 KΩ ¼w ±5% Carbon Comp.	1065-4701	A.B.
R22	1 MEGΩ ¼w ±5% Carbon Comp.	1065-1004	A.B.
R23	4.7 KΩ ¼w ±5% Carbon Comp.	1065-4701	A.B.
R24	47 KΩ ¼w ±5% Carbon Comp.	1065-4702	A.B.
R25	4.7 KΩ ¼w ±5% Carbon Comp.	1065-4701	A.B.
R26	2.2 KΩ ¼w ±5% Carbon Comp.	1065-2201	A.B.
R27	47 KΩ ¼w ±5% Carbon Comp.	1065-4702	A.B.
R28	4.7 KΩ ¼w ±5% Carbon Comp.	1065-4701	A.B.
R29	2.2 KΩ ¼w ±5% Carbon Comp.	1065-2201	A.B.
R30	150 KΩ ¼w ±5% Carbon Comp.	1065-1503	A.B.
R31	4.7 KΩ ¼w ±5% Carbon Comp.	1065-4701	A.B.
R32	2.2 KΩ ¼w ±5% Carbon Comp.	1065-2201	A.B.
R33	4.7 KΩ ¼w ±5% Carbon Comp.	1065-4701	A.B.
R34	4.7 KΩ ¼w ±5% Carbon Comp.	1065-4701	A.B.
R35	1.5 KΩ ¼w ±5% Carbon Comp.	1065-1501	A.B.
R36	750 Ω ¼w ±5% Carbon Comp.	1065-0750	A.B.

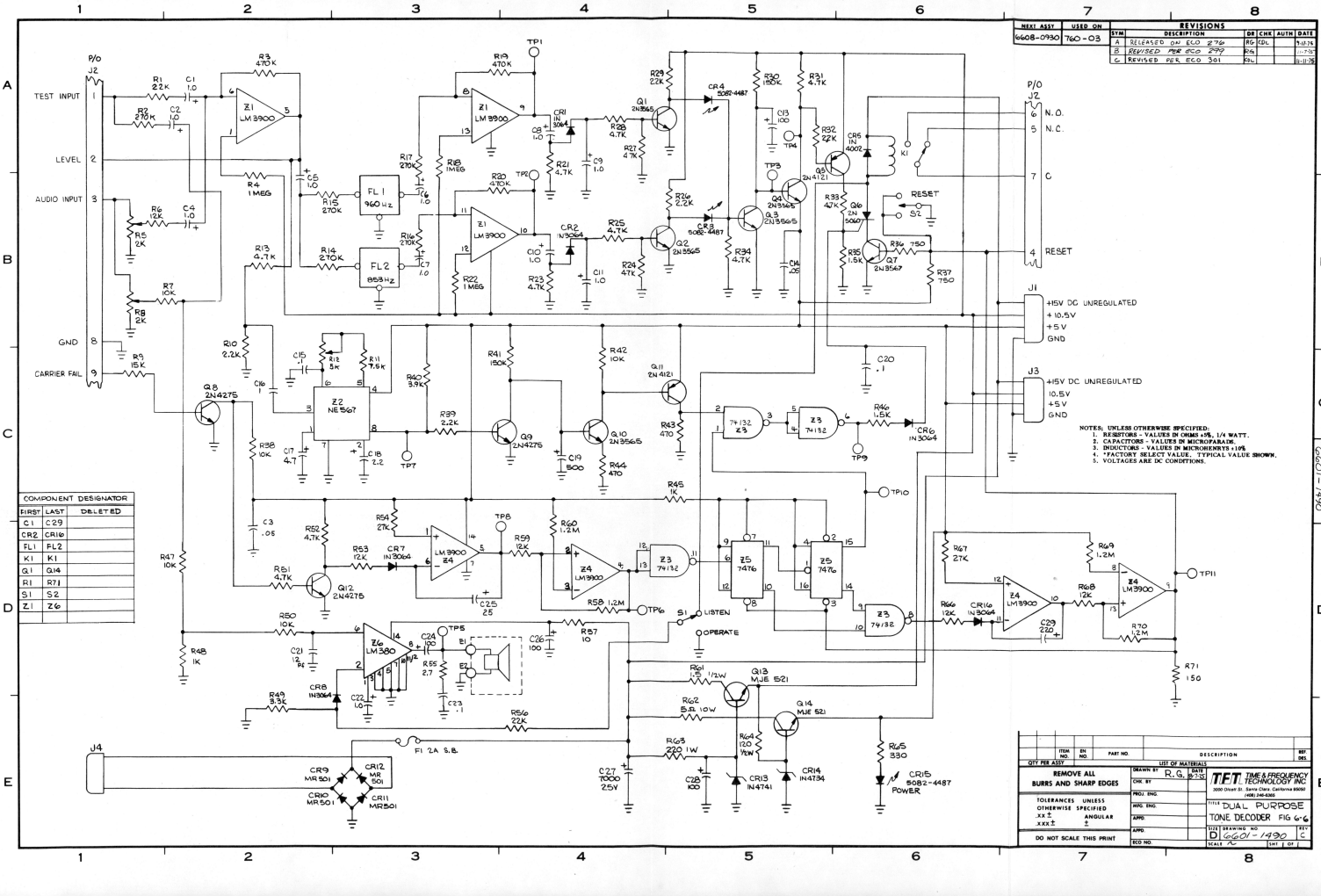

NOTES: UNLESS OTHERWISE SPECIFIED:
1. RESISTORS - VALUES IN OHMS ±5%, 1/4 WATT.
2. CAPACITORS - VALUES IN MICROFARADS.
3. INDUCTORS - VALUES IN MICROHENRYS ±10%
4. *FACTORY SELECT VALUE. TYPICAL VALUE SHOWN.
5. VOLTAGES ARE DC CONDITIONS.

DWG NO 6601-1490

COMPONENT DESIGNATOR		
FIRST	LAST	DELETED
C1	C29	
CR2	CR16	
FL1	FL2	
K1	K1	
Q1	Q14	
R1	R71	
S1	S2	
Z1	Z6	

NEXT ASSY	USED ON
6608-0930	760-03

REVISIONS				
SYM	DESCRIPTION	DR	CHK	AUTH	DATE
A	RELEASED ON ECO 276	RG	CDL		9-1-76
B	REVISED PER ECO 299	RG			11-7-76
G	REVISED PER ECO 301	RG			11-11-76

ITEM NO.	EN NO.	PART NO.	DESCRIPTION	REF DES.
QTY PER ASSY			LIST OF MATERIALS	

REMOVE ALL BURRS AND SHARP EDGES

TOLERANCES UNLESS OTHERWISE SPECIFIED
XX ±
XXX ±
ANGULAR ±

DO NOT SCALE THIS PRINT

DRAWN BY R.G. DATE 8-5-76
CHK BY
PROJ. ENG.
MFG. ENG.
APPR.
APPR.
ECO NO.

T.F.T. TIME & FREQUENCY TECHNOLOGY INC.
3000 Olcott St. Santa Clara, California 95050
(408) 246-5365

TITLE DUAL PURPOSE TONE DECODER FIG 6-6

SIZE D DRAWING NO 6601-1490 REV C
SCALE ∞ SHT OF